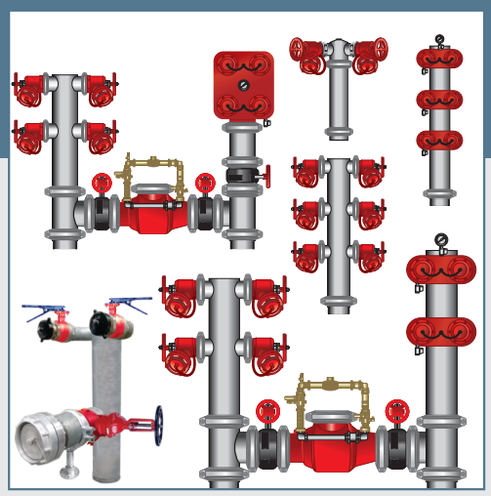

FIRE SYSTEMS

Page No. 01 - 27

HYDRANT & SPRINKLER SYSTEMS VIC/TAS
HYDRANT & SPRINKLER SYSTEMS NSW
HYDRANT & SPRINKLER SYSTEMS QLD
HYDRANT & SPRINKLER SYSTEMS SA
HYDRANT & SPRINKLER SYSTEMS WA
STORZ TREE - ACCESSORIES
TANK SUCTION ASSEMBLY

VALVES

Page No. 29 - 49

BRASS VALVES
BOOSTER HEAD & ACCESSORIES
CAST IRON VALVES
FIRE SERVICE GROOVED & FLANGED VALVES
HYDRANT VALVES / MILLCOCK / LANDING VALVE & ACCESSORIES
PVC BALL VALVES
STAINLESS STEEL VALVES

PIPE & PIPE FITTINGS

Page No. 51 - 174

BLACK STEEL FITTINGS
CARBON STEEL BUTT WELD FITTINGS
CARBON STEEL HIGH PRESSURE FITTINGS
FABRICATED FITTINGS
FLANGES & GASKETS
FOOT VALVES
GALVANIZED FLANGE FITTINGS
GALVANIZED MALLEABLE IRON FITTINGS
GAL STEEL FITTINGS
HYDRANT RISERS
PIPES
PIPE & TUBE CLAMPS
R/G DUCILE IRON PIPE FITTINGS
R/G STAINLESS STEEL PIPE FITTINGS
S/STEEL BUTT WELD FITTINGS
S/STEEL FITTINGS
S/STEEL FERRULE FITTINGS
S/STEEL FITTINGS - BSM **(BRITISH STANDARD MILK)**
TANK SUCTION EQUIPMENT
THREADED GALVANIZED PIPE PIECES
THREADED S/STEEL PIPE PIECES

TUBE & TUBE FITTINGS

Page No. 177 - 179

STAINLESS STEEL TUBE
STAINLESS STEEL TUBE FITTINGS

CABINETS

Page No. 181 - 188

DUAL & QUAD HYDRANT CABINETS
EMERGENCY INFORMATION, ESSENTIAL SERVICES &
FIRE EXTINGUISHER CABINETS
FIRE HOSE REEL CABINETS
FIRE HYDRANT & HOSE CABINETS
MANIFEST CABINETS & ACCESSORIES
SPRINKLER CABINETS
TANK SUCTION CABINETS

FIRE EQUIPEMENT

Page No. 191 - 243

BOOSTER HEAD & ACCESSORIES
B. I. (BRITISH INSTANTANEOUS) FITTINGS
BRANCH PIPES, DIRECTORS & NOZZLES
COUPLINGS, ADAPTORS, CAPS & PLUGS
FIRE HOSE REEL & ACCESSORIES
FORESTRY / QUICK CONNECT / EXTERNAL LUG FITTINGS **-ULC APP.**
HYDRANT VALVES & ACCESSORIES
NIPPLES
STORZ COUPLINGS & ADAPTORS **- FORGED - NEN 3374 & DIN APP.**
STORZ TREE
STRAINERS, CAPS & FITTINGS
STANDPIPES
WYES / BREECHES / DIVIDERS

HOSES & HOSE FITTINGS

Page No. 245 - 265

BAUER STYLE COUPLINGS
BRASS WARE HOSE BARB & TAILS
CAMLOCKS
CLEAR VINYL HOSE
FLEXIBLE BORE HOSES
HOSE & HOSE FITTINGS
LAY FLAT HOSES
NOZZLES
SUCTION HOSES

MISCELLANEOUS PRODUCTS

Page No. 267 - 269

BORE CAPS
DENSO TAPE ETC
ISOLATION RUBBER MOUNTS
SEALING TAPES
VIBRATION ELIMINATORS
SPRING MOUNTS

SIGNAGES

Page No. 271 - 302

90° & 180° WALL SIGNS
ALUMINIUM ACID ETCHED SIGNS
FIRE EXTINGUISHER SIGNS
FIRE SIGNS-MEDIUM
FIRE SIGNS-LARGE
MISCELLANEOUS SIGNS
PIPE MARKERS & CODE TAPES
TAGS
VINYL CUT LETTER (STENCIL)

FIRE SYSTEMS

- HYDRANT & SPRINKLER SYSTEMS VIC/TAS 01 - 18
- HYDRANT & SPRINKLER SYSTEMS NSW 19 - 20
- HYDRANT & SPRINKLER SYSTEMS QLD 21 - 22
- HYDRANT & SPRINKLER SYSTEMS SA 23 - 24
- HYDRANT & SPRINKLER SYSTEMS WA 25 - 26
- STORZ TREE - ACCESSORIES 27
- TANK SUCTION ASSEMBLY 27

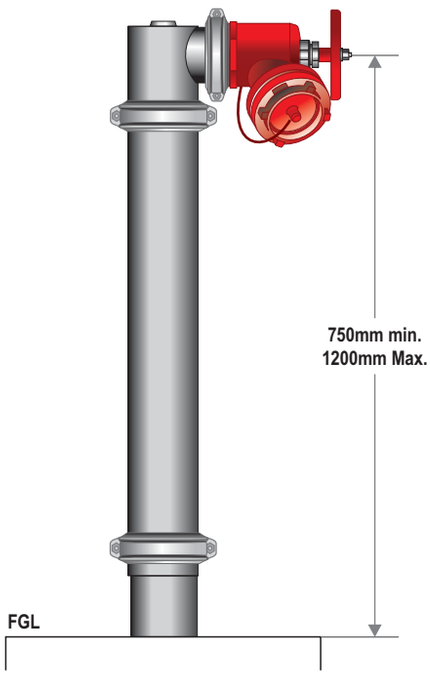

100mm Single Hydrant Riser Roll Groove

PART No	DESCRIPTION
203001	Single Hydrant Riser R/G STORZ/MFB c/w Brazing Adaptor
203002	Single Hydrant Riser R/G CFA c/w Brazing Adaptor

(Please specify at the time of order if brazing adaptor is NOT required)

Hydrant Valve Approval : AS 2419.2, AS/NZS 4020 & Water Marked

Hydrant Riser Complies to : AS 2419.1

Copper alloy Brazing Adaptor

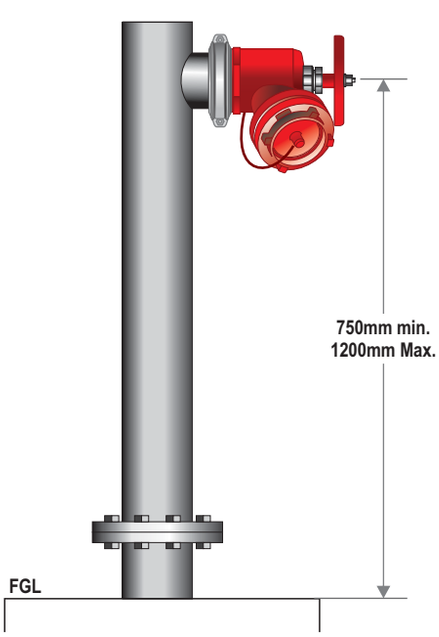

100mm Single Hydrant Riser - Flanged

PART No	DESCRIPTION
203003	Single Hydrant Riser STORZ/MFB c/w Flanged Adaptor
203004	Single Hydrant Riser CFA c/w Flanged Adaptor

Hydrant Valve Approval : AS 2419.2, AS/NZS 4020 & Water Marked

Hydrant Riser Complies to : AS 2419.1

Flanged Adaptor

Fire Australia Co Pty Ltd.
ABN No. 13165523713
47 Rushdale St. Knoxfield VIC-3180. Tel:(03) 9764 0020, Fax: (03) 9764 0023.
E-mail : sales@fireausco.com.au www.fireausco.com.au

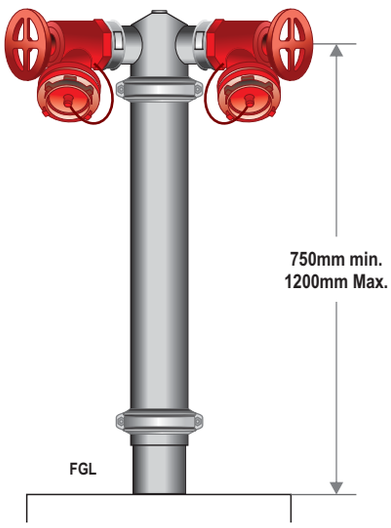

100mm Dual Hydrant Riser Roll Groove

PART No	DESCRIPTION
203005	Dual Hydrant Riser R/G STORZ/MFB c/w Brazing Adaptor
203006	Dual Hydrant Riser R/G CFA c/w Brazing Adaptor

(Please specify at the time of order if brazing adopter NOT required)

Hydrant Valve Approval : AS 2419.2, AS/NZS 4020 & Water Marked

Hydrant Riser Complies to : AS 2419.1

Copper alloy Brazing Adaptor

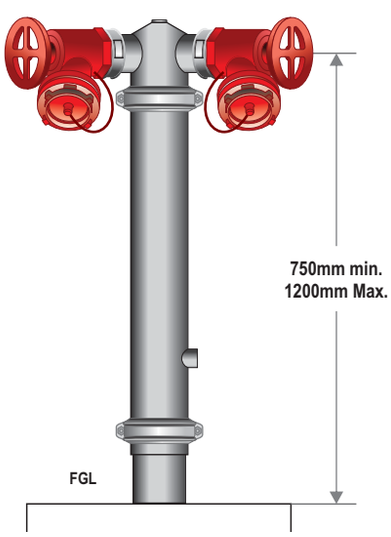

100mm Dual Hydrant Riser Roll Groove with BSP Socket

PART No	DESCRIPTION
203007	Dual Hydrant Riser R/G with 32 BSP Socket MFB / Storz
203008	Dual Hydrant Riser R/G with 32 BSP Socket CFA
203122	Dual Hydrant Riser R/G with 25 BSP Socket MFB / Storz
203124	Dual Hydrant Riser R/G with 50 BSP Socket MFB / Storz

(Please specify at the time of order if brazing adopter NOT required)

Hydrant Valve Approval : AS 2419.2, AS/NZS 4020 & Water Marked

Hydrant Riser Complies to : AS 2419.1

Copper alloy Brazing Adaptor

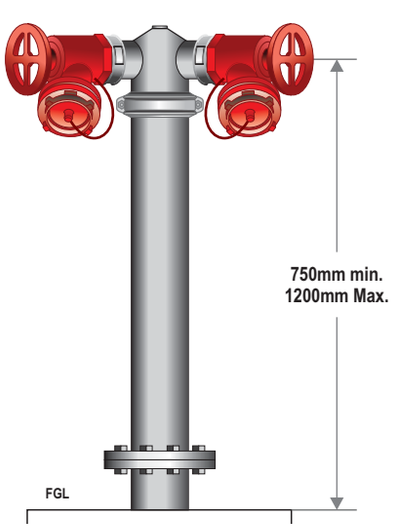

100mm Dual Hydrant Riser - Flanged

PART No	DESCRIPTION
203010	Dual Hydrant Riser STORZ/MFB c/w Flanged Adaptor
203011	Dual Hydrant Riser CFA c/w Flanged Adaptor

Hydrant Valve Approval : AS 2419.2, AS/NZS 4020 & Water Marked

Hydrant Riser Complies to : AS 2419.1

Flanged Adaptor

Fire Australia Co Pty Ltd.
ABN No. 13165523713
47 Rushdale St. Knoxfield VIC-3180. Tel:(03) 9764 0020, Fax: (03) 9764 0023.
E-mail : sales@fireausco.com.au www.fireausco.com.au

FIRE AUSTRALIA CO

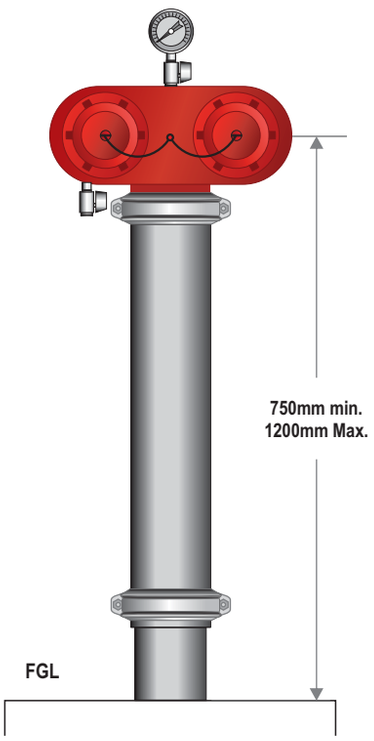

100mm Dual Booster Riser Roll Groove

PART No	DESCRIPTION
203014	Dual Booster Riser R/G Storz c/w Brazing Adaptor
203015	Dual Booster Riser R/G CFA c/w Brazing Adaptor

(Please specify at the time of order if brazing adaptor is NOT required)

Flange Adaptor option is also available
Boosters Approval : AS 2419.3 & Water Marked
Booster Riser Complies to : AS 2419.1

Copper alloy
Brazing Adaptor

Please Note :
The standard Dual Boosters supplied by Fire Australia Co. are rated to Class 14 & Class 21, as per AS2419.3
Class 35 Boosters are also available upon request. P.O.A.

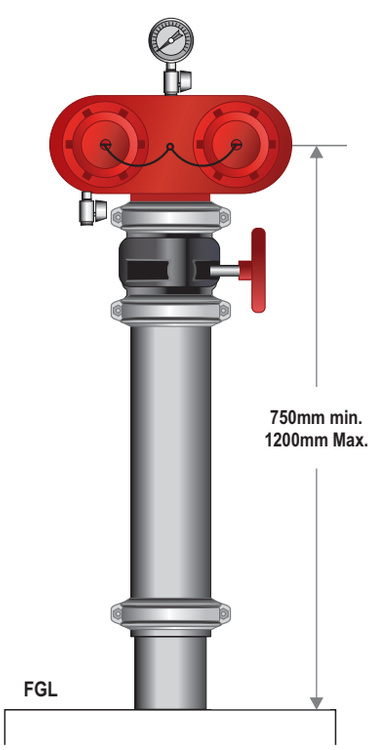

100mm Dual Booster Riser Roll Groove with Booster Valve

PART No	DESCRIPTION
203016	Dual Booster Riser R/G c/w Brazing Adaptor Storz & Booster Valve
203017	Dual Booster Riser R/G c/w Brazing Adaptor CFA & Booster Valve

(Please specify at the time of order if brazing adaptor is NOT required)

Flange Adaptor option is also available
Butter fly valve - Water Marked
Boosters Approval : AS 2419.3 & Water Marked
Booster Riser Complies to : AS 2419.1

Copper alloy
Brazing Adaptor

Please Note :
The standard Dual Boosters supplied by Fire Australia Co. are rated to Class 14 & Class 21, as per AS2419.3
Class 35 Boosters are also available upon request. P.O.A.

100mm Dual Booster & Feed Hydrant Roll Groove

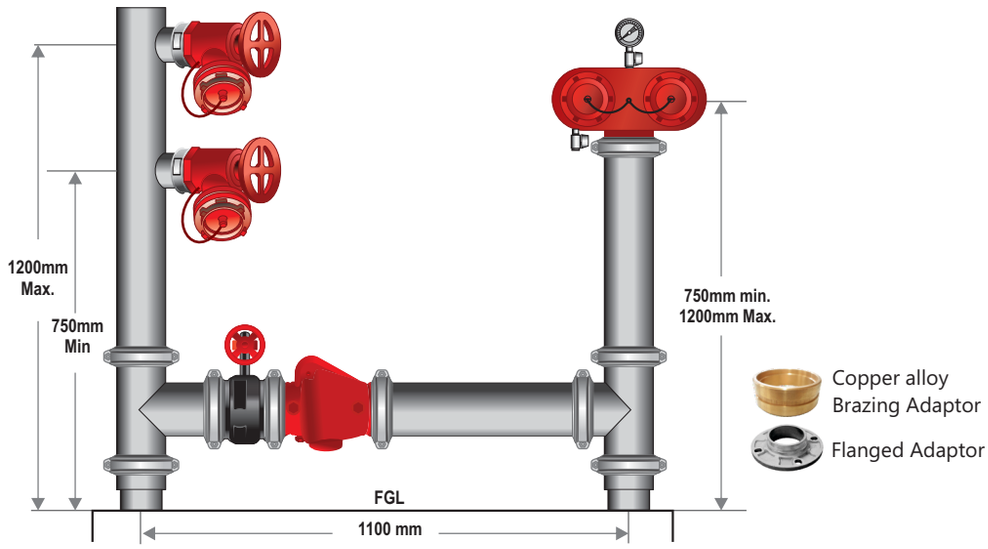

PART No	DESCRIPTION
203018	Dual Booster & Feed Hydrant R/G - MFB/Storz c/w Brazing Adaptor
203019	Dual Booster & Feed Hydrant R/G - CFA c/w Brazing Adaptor

(Please specify at the time of order if brazing adaptor is NOT required)
Flanged adaptor option is also available. Butterfly valve - Water Marked
Hydrant Valves / Millcocks are approved to 2419.2-2005 - Water Marked
Boosters Approval : AS 2419.3 & Water Marked System Complies to : AS 2419.1

Please Note :
The standard Dual Boosters supplied by Fire Australia Co. are rated to Class 14 & Class 21, as per AS2419.3
Class 35 Boosters are also available upon request. P.O.A.

100mm Dual Booster & Feed Hydrant Roll Groove with Booster Valve

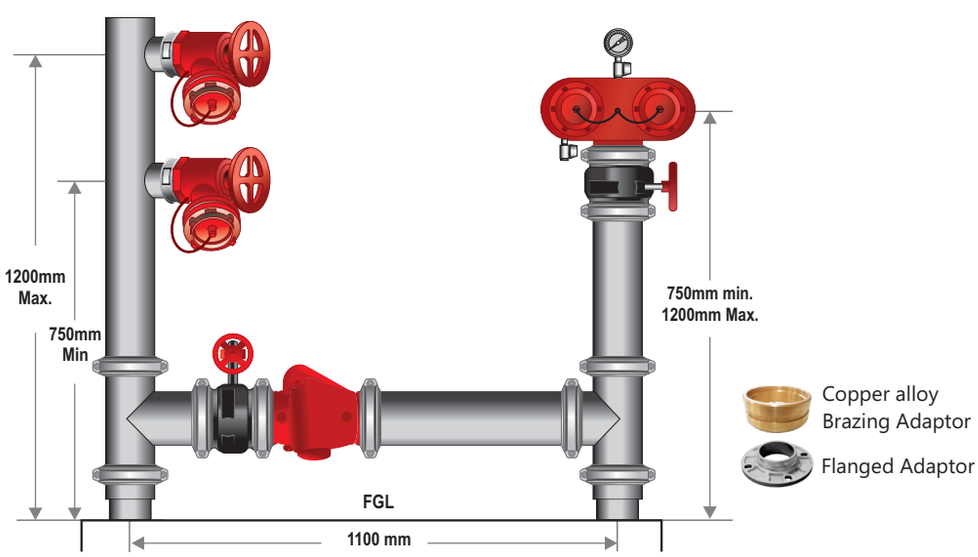

PART No	DESCRIPTION
203021	Dual Booster & Feed Hydrant R/G c/w Brazing Adaptor - Storz & Booster Valve
203022	Dual Booster & Feed Hydrant R/G c/w Brazing Adaptor - CFA & Booster Valve

(Please specify at the time of order if brazing adaptor is NOT required)
Flanged adaptor option is also available. Butterfly valve - Water Marked
Hydrant Valves / Millcocks are approved to 2419.2-2005 - Water Marked
Boosters Approval : AS 2419.3 & Water Marked System Complies to : AS 2419.1

Please Note :
The standard Dual Boosters supplied by Fire Australia Co. are rated to Class 14 & Class 21, as per AS2419.3
Class 35 Boosters are also available upon request. P.O.A.

Fire Australia Co Pty Ltd.
ABN No. 13165523713
47 Rushdale St. Knoxfield VIC-3180. Tel:(03) 9764 0020, Fax: (03) 9764 0023.
E-mail : sales@fireausco.com.au www.fireausco.com.au

FIRE AUSTRALIA CO

100mm Dual Booster & Feed Hydrant Roll Groove with Single Detector Check Valve

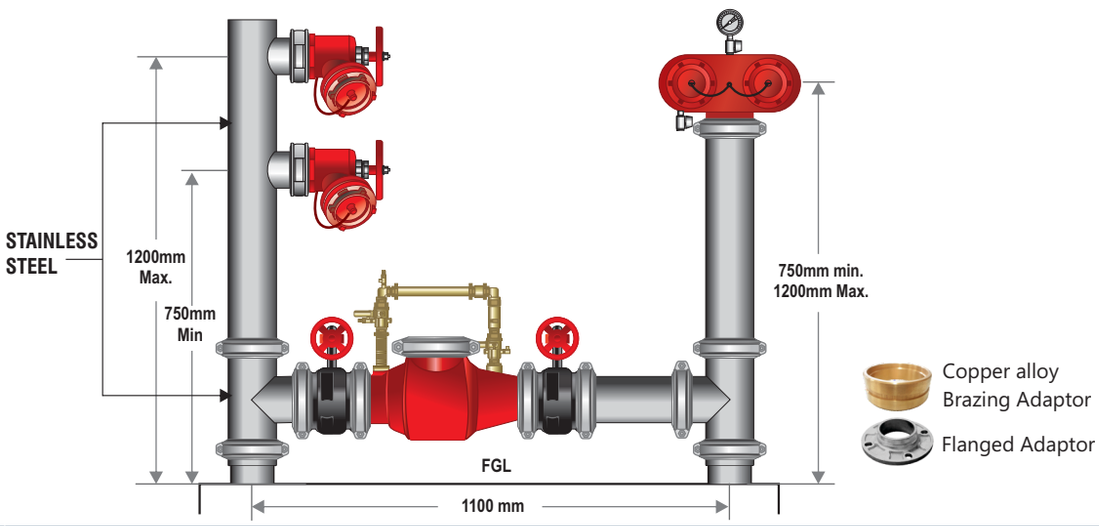

PART No	DESCRIPTION
203023	Dual Booster & Feed Hydrant R/G c/w Brazing Adaptor with MFB/Storz & Single Detector Check Valve South East Water
203024	Dual Booster & Feed Hydrant R/G c/w Brazing Adaptor with CFA & Single Detector Check Valve South East Water
203025	Dual Booster & Feed Hydrant R/G c/w Brazing Adaptor with MFB/Storz & Single Detector Check Valve City West Water
203026	Dual Booster & Feed Hydrant R/G c/w Brazing Adaptor with CFA & Single Detector Check Valve City West Water

(Please specify at the time of order if brazing adaptor is NOT required)
Flanged adaptor option is also available. Butterfly valve - Water Marked
Hydrant Valves / Millcocks are approved to 2419.2-2005 - Water Marked
Boosters Approval : AS 2419.3 & Water Marked System Complies to : AS 2419.1

Please Note :
The standard Dual Boosters supplied by Fire Australia Co. are rated to Class 14 & Class 21, as per AS2419.3
Class 35 Boosters are also available upon request. P.O.A.

100mm Dual Booster & Feed Hydrant Roll Groove withMetered Single Detector Check Valve

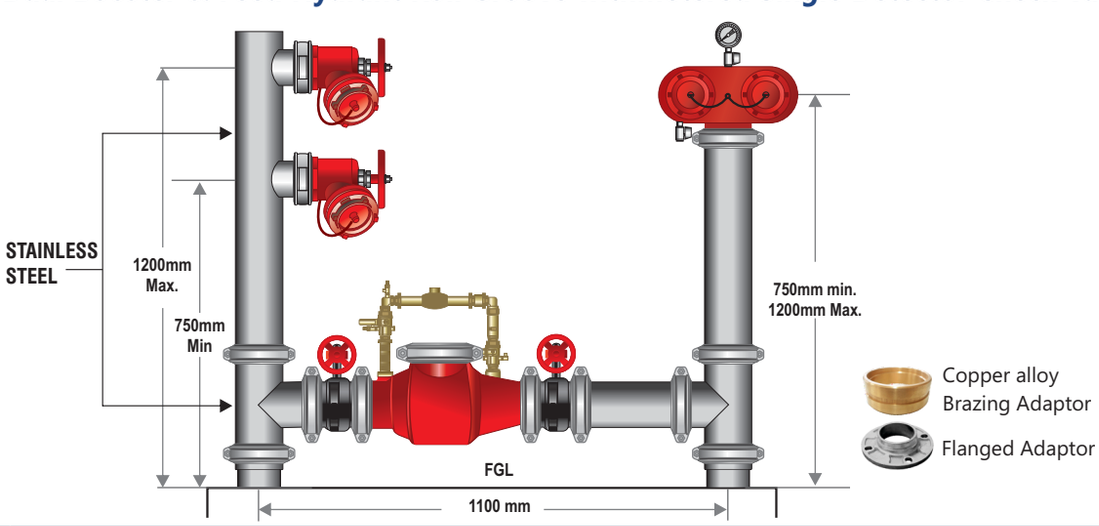

PART No	DESCRIPTION
203027	Dual Booster & Feed Hydrant R/G c/w Brazing Adaptor with Storz & Metered Single Detector Check Valve Yarra Valley Water
203028	Dual Booster & Feed Hydrant R/G c/w Brazing Adaptor with MFB & Metered Single Detector Check Valve Yarra Valley Water
203029	Dual Booster & Feed Hydrant R/G c/w Brazing Adaptor with CFA & Metered Single Detector Check Valve Yarra Valley Water

(Please specify at the time of order if brazing adaptor is NOT required)
Flanged adaptor option is also available. Butterfly valve - Water Marked
Hydrant Valves / Millcocks are approved to 2419.2-2005 - Water Marked
Boosters Approval : AS 2419.3 & Water Marked System Complies to : AS 2419.1

Please Note :
The standard Dual Boosters supplied by Fire Australia Co. are rated to Class 14 & Class 21, as per AS2419.3
Class 35 Boosters are also available upon request. P.O.A.

100mm Dual Booster & Feed Hydrant Roll Groove with Single Detector Check Valve & Booster Valve

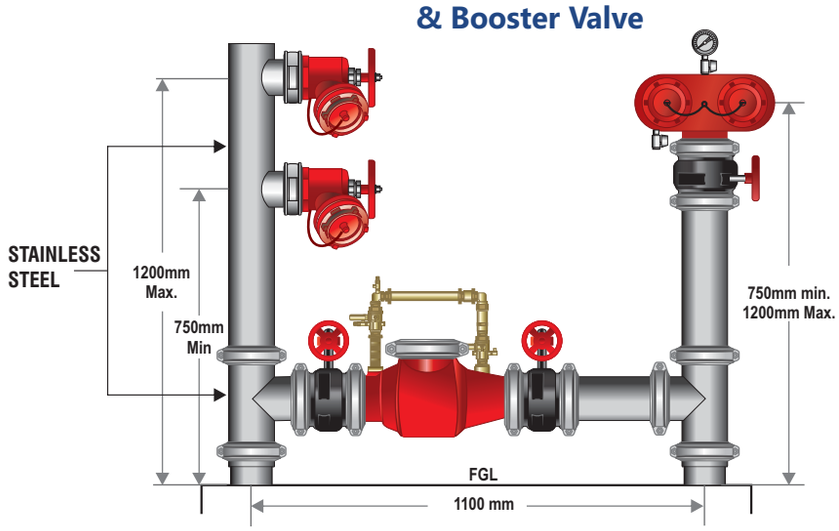

Copper alloy Brazing Adaptor

Flanged Adaptor

SEW : South East Water
CWW : City West Water

PART No	DESCRIPTION
203030	Dual Booster & Feed Hydrant R/G c/w Brazing Adaptor with MFB/Storz & Single Detector Check Valve & Booster Valve SEW
203031	Dual Booster & Feed Hydrant R/G c/w Brazing Adaptor with CFA & Single Detector Check Valve & Booster Valve SEW
203032	Dual Booster & Feed Hydrant R/G c/w Brazing Adaptor with MFB/Storz & Single Detector Check Valve & Booster Valve CWW
203033	Dual Booster & Feed Hydrant R/G c/w Brazing Adaptor with CFA & Single Detector Check Valve & Booster Valve CWW

(Please specify at the time of order if brazing adaptor is NOT required)
Flanged adaptor option is also available. Butterfly valve - Water Marked
Hydrant Valves / Millcocks are approved to 2419.2-2005 - Water Marked
Boosters Approval : AS 2419.3 & Water Marked System Complies to : AS 2419.1

Please Note :
The standard Dual Boosters supplied by Fire Australia Co. are rated to Class 14 & Class 21, as per AS2419.3 Class 35 Boosters are also available upon request. P.O.A.

100mm Dual Booster & Feed Hydrant Roll Groove with Metered Single Detector Check Valve & Booster Valve

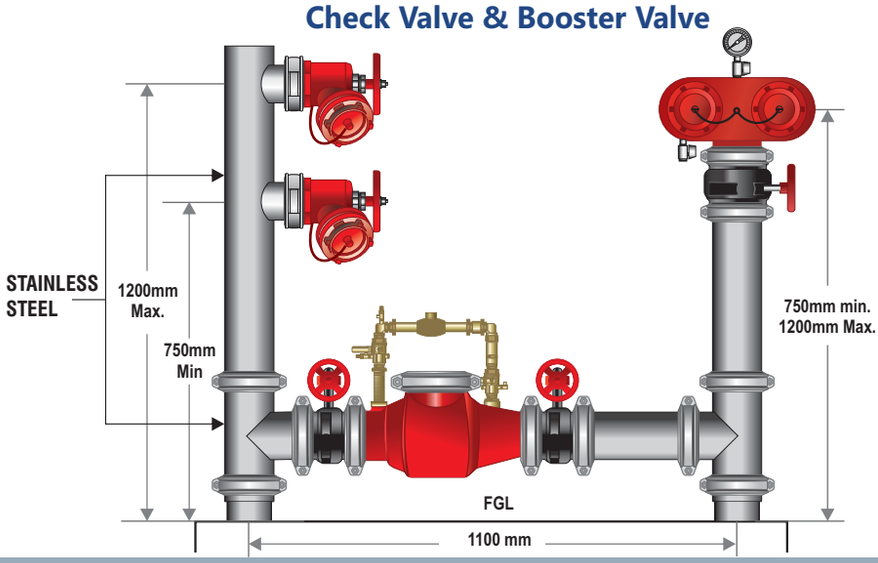

Copper alloy Brazing Adaptor

Flanged Adaptor

YVW : Yarra Valley Water

PART No	DESCRIPTION
203034	Dual Booster & Feed Hydrant R/G with c/w Brazing Adaptor MFB/Storz & Metered Single Detector Check Valve & Booster Valve YVW
203035	Dual Booster & Feed Hydrant R/G with c/w Brazing Adaptor CFA & Metered Single Detector Check Valve & Booster Valve YVW

(Please specify at the time of order if brazing adaptor is NOT required)
Flanged adaptor option is also available. Butterfly valve - Water Marked
Hydrant Valves / Millcocks are approved to 2419.2-2005 - Water Marked
Boosters Approval : AS 2419.3 & Water Marked System Complies to : AS 2419.1

Please Note :
The standard Dual Boosters supplied by Fire Australia Co. are rated to Class 14 & Class 21, as per AS2419.3 Class 35 Boosters are also available upon request. P.O.A.

Fire Australia Co Pty Ltd.
ABN No. 13165523713
47 Rushdale St. Knoxfield VIC-3180. Tel:(03) 9764 0020, Fax: (03) 9764 0023.
E-mail : sales@fireausco.com.au www.fireausco.com.au

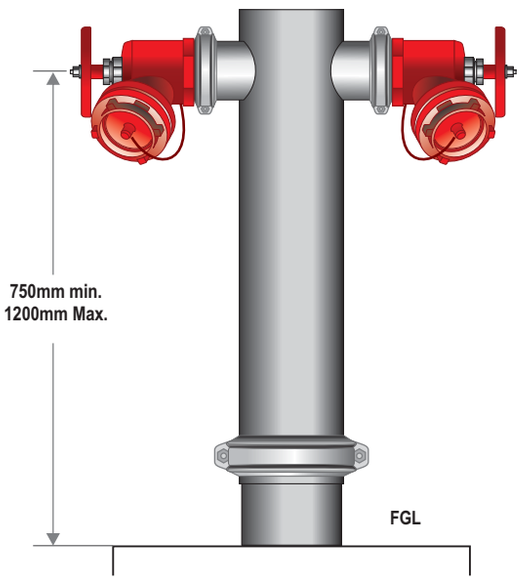

150mm Dual Hydrant Riser Roll Groove

PART No	DESCRIPTION
203036	150mm Dual Hydrant Riser R/G - Storz c/w Brazing Adaptor
203037	150mm Dual Hydrant Riser R/G - CFA c/w Brazing Adaptor

(Please specify at the time of order if brazing adaptor is NOT required)

Hydrant Valve Approval : AS 2419.2, AS/NZS 4020 & Water Marked
Hydrant Riser Complies to : AS 2419.1

Copper alloy Brazing Adaptor

Flanged Adaptor

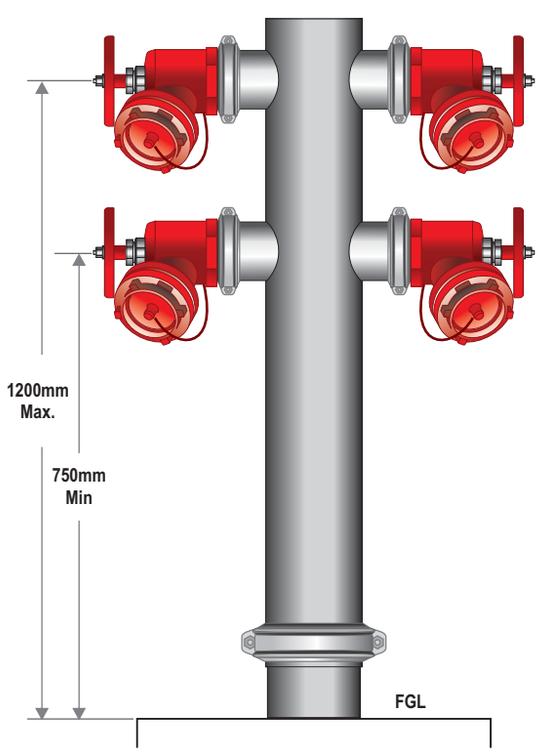

150mm Quad Hydrant Riser Roll Groove

PART No	DESCRIPTION
203038	150mm Quad Hydrant Riser R/G - Storz c/w Brazing Adaptor
203039	150mm Quad Hydrant Riser R/G - CFA c/w Brazing Adaptor

(Please specify at the time of order if brazing adaptor is NOT required)

Hydrant Valve Approval : AS 2419.2, AS/NZS 4020 & Water Marked
Hydrant Riser Complies to : AS 2419.1

Copper alloy Brazing Adaptor

Flanged Adaptor

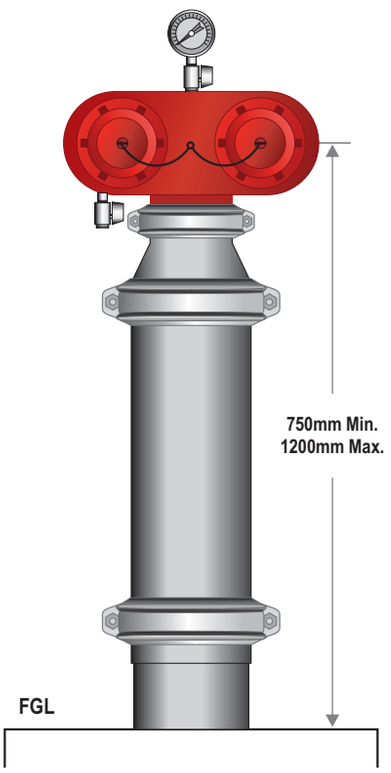

150mm Dual Booster Riser Roll Groove

PART No	DESCRIPTION
203040	150mm Dual Booster Riser R/G with Storz c/w Brazing Adaptor
203041	150mm Dual Booster Riser R/G with CFA c/w Brazing Adaptor

(Please specify at the time of order if brazing adaptor is NOT required)

Flange Adaptor option is also available
Booster Approval : AS 2419.3 & Water Marked
Booster Riser Complies to : AS 2419.1

Copper alloy Brazing Adaptor

Flanged Adaptor

Please Note :
The standard Dual Boosters supplied by Fire Australia Co. are rated to Class 14 & Class 21, as per AS2419.3
Class 35 Boosters are also available upon request. P.O.A.

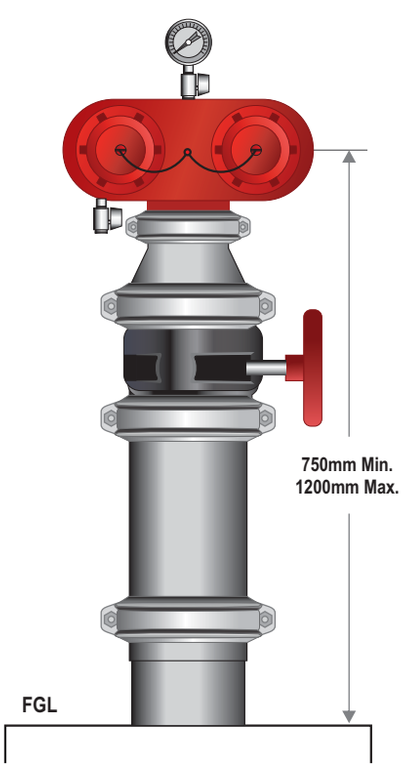

150mm Dual Booster Riser Roll Groove with Booster Valve

PART No	DESCRIPTION
203042	150mm Dual Booster Riser R/G c/w Brazing Adaptor with Storz & Booster Valve
203043	150mm Dual Booster Riser R/G c/w Brazing Adaptor with CFA & Booster Valve

(Please specify at the time of order if brazing adaptor is NOT required)

Flange Adaptor option is also available
Butter fly valve - Water Marked
Booster Approval : AS 2419.3 & Water Marked
Booster Riser Complies to : AS 2419.1

Copper alloy Brazing Adaptor

Flanged Adaptor

Please Note :
The standard Dual Boosters supplied by Fire Australia Co. are rated to Class 14 & Class 21, as per AS2419.3
Class 35 Boosters are also available upon request. P.O.A.

Fire Australia Co Pty Ltd.
ABN No. 13165523713
47 Rushdale St. Knoxfield VIC-3180. Tel:(03) 9764 0020, Fax: (03) 9764 0023.
E-mail : sales@fireausco.com.au www.fireausco.com.au

FIRE AUSTRALIA CO

150mm Dual Booster & Feed Hydrant Roll Groove

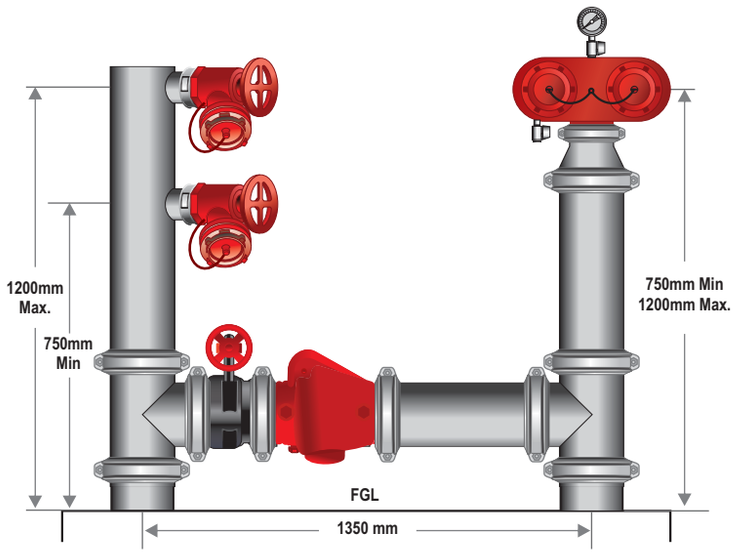

Copper alloy
Brazing Adaptor

Flanged Adaptor

PART No	DESCRIPTION
203044	150mm Dual Booster & Feed Hydrant R/G with Storz c/w Brazing Adaptor
203045	150mm Dual Booster & Feed Hydrant R/G with CFA c/w Brazing Adaptor

(Please specify at the time of order if brazing adaptor is NOT required)
Flanged adaptor option is also available. Butterfly valve - Water Marked
Hydrant Valves / Millcocks are approved to 2419.2-2005 - Water Marked
Boosters Approval : AS 2419.3 & Water Marked System Complies to : AS 2419.1

Please Note :
The standard Dual Boosters supplied by Fire Australia Co. are rated to Class 14 & Class 21, as per AS2419.3 Class 35 Boosters are also available upon request. P.O.A.

150mm Dual Booster & Feed Hydrant Roll Groove with Booster Valve

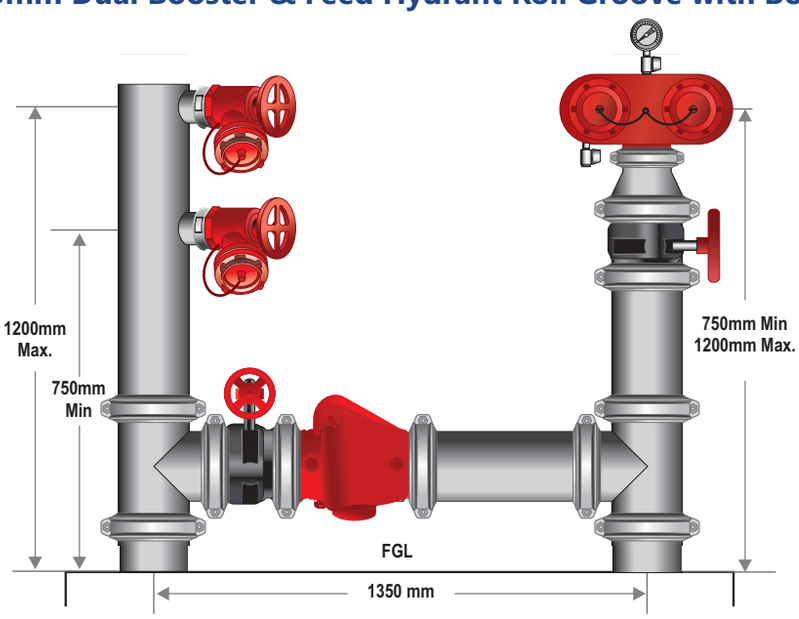

Copper alloy
Brazing Adaptor

Flanged Adaptor

PART No	DESCRIPTION
203046	150mm Dual Booster & Feed Hydrant R/G c/w Brazing Adaptor with Storz & Booster Valve
203047	150mm Dual Booster & Feed Hydrant R/G c/w Brazing Adaptor with CFA & Booster Valve

(Please specify at the time of order if brazing adaptor is NOT required)
Flanged adaptor option is also available. Butterfly valve - Water Marked
Hydrant Valves / Millcocks are approved to 2419.2-2005 - Water Marked
Boosters Approval : AS 2419.3 & Water Marked System Complies to : AS 2419.1

Please Note :
The standard Dual Boosters supplied by Fire Australia Co. are rated to Class 14 & Class 21, as per AS2419.3 Class 35 Boosters are also available upon request. P.O.A.

150mm Quad Booster & Feed Hydrant Roll Groove

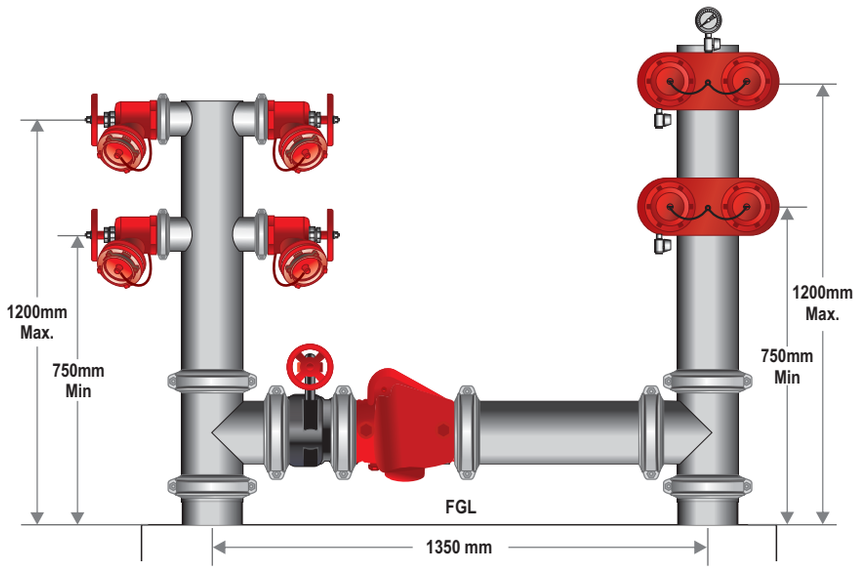

Copper alloy
Brazing Adaptor

Flanged Adaptor

PART No	DESCRIPTION
203048	150mm Quad Booster & Feed Hydrant R/G with Storz c/w Brazing Adaptor
203049	150mm Quad Booster & Feed Hydrant R/G with CFA c/w Brazing Adaptor

(Please specify at the time of order if brazing adaptor is NOT required)
Flanged adaptor option is also available. Butterfly valve - Water Marked
Hydrant Valves / Millcocks are approved to 2419.2-2005 - Water Marked
Boosters Approval : AS 2419.3 & Water Marked System Complies to : AS 2419.1

Please Note :
The standard Dual Boosters supplied by Fire Australia Co. are rated to Class 14 & Class 21, as per AS2419.3
Class 35 Boosters are also available upon request. P.O.A.

150mm Quad Booster & Feed Hydrant Roll Groove with Booster Valve

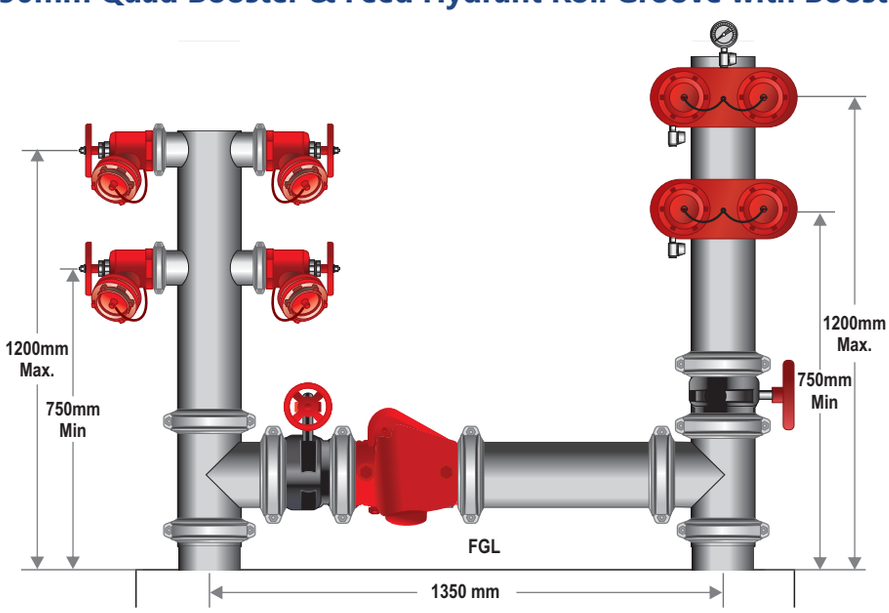

Copper alloy
Brazing Adaptor

Flanged Adaptor

PART No	DESCRIPTION
203050	150mm Quad Booster & Feed Hydrant R/G c/w Brazing Adaptor with Storz & Booster Valve
203051	150mm Quad Booster & Feed Hydrant R/G c/w Brazing Adaptor with CFA & Booster Valve

(Please specify at the time of order if brazing adaptor is NOT required)
Flanged adaptor option is also available. Butterfly valve - Water Marked
Hydrant Valves / Millcocks are approved to 2419.2-2005 - Water Marked
Boosters Approval : AS 2419.3 & Water Marked System Complies to : AS 2419.1

Please Note :
The standard Dual Boosters supplied by Fire Australia Co. are rated to Class 14 & Class 21, as per AS2419.3
Class 35 Boosters are also available upon request. P.O.A.

Fire Australia Co Pty Ltd.
ABN No. 13165523713
47 Rushdale St. Knoxfield VIC-3180. Tel:(03) 9764 0020, Fax: (03) 9764 0023.
E-mail : sales@fireausco.com.au www.fireausco.com.au

150mm Quad Booster (Compact Design) & Feed Hydrant Roll Groove

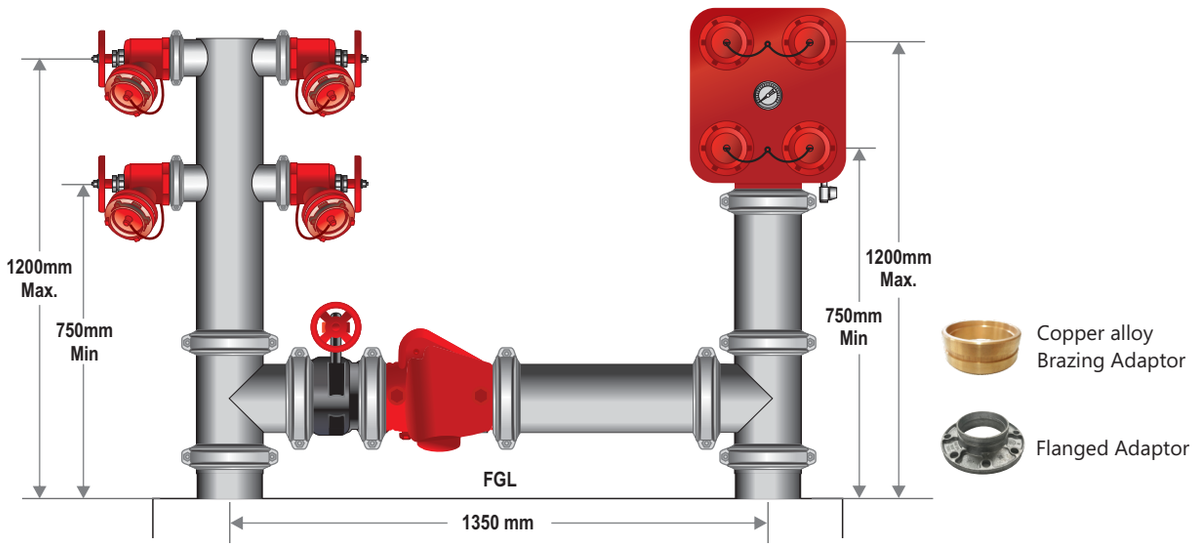

PART No	DESCRIPTION
203083	150mm Quad Booster (Compact Design) & Feed Hydrant R/G with Storz c/w Brazing Adaptor
203084	150mm Quad Booster (Compact Design) & Feed Hydrant R/G with CFA c/w Brazing Adaptor

(Please specify at the time of order if brazing adaptor is NOT required)
Flanged adaptor option is also available. Butterfly valve - Water Marked
Hydrant Valves / Millcocks are approved to 2419.2-2005 - Water Marked
Boosters Approval : AS 2419.3 & Water Marked System Complies to : AS 2419.1

150mm Quad Booster (Compact Design) & Feed Hydrant Roll Groove with Booster Valve

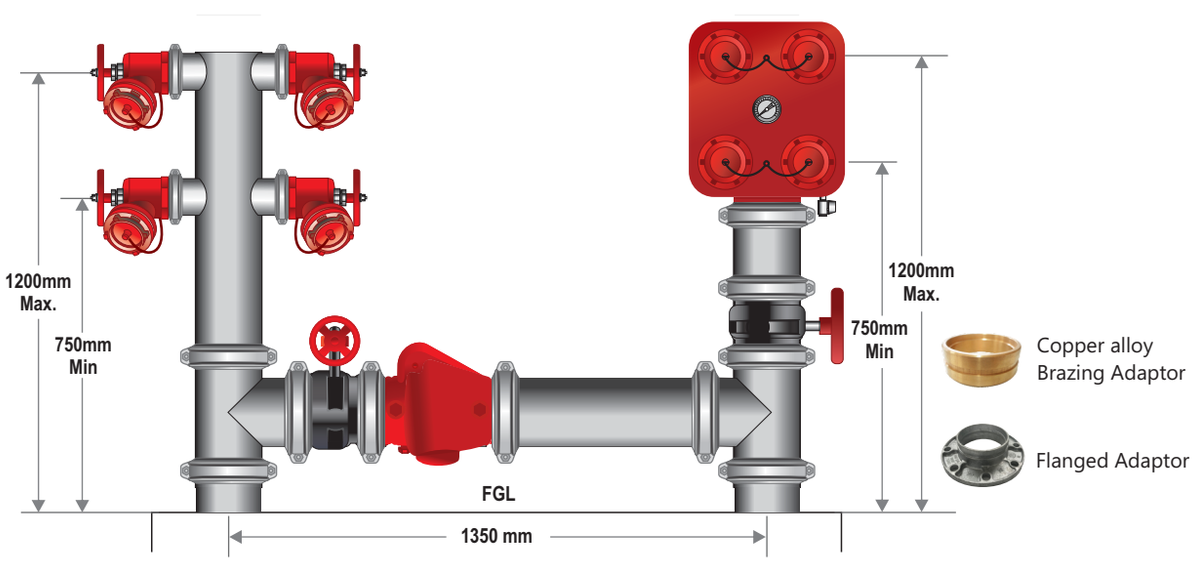

PART No	DESCRIPTION
203085	150mm Quad Booster (Compact Design) & Feed Hydrant R/G c/w Brazing Adaptor with Storz & Booster Valve
203086	150mm Quad Booster (Compact Design) & Feed Hydrant R/G c/w Brazing Adaptor with CFA & Booster Valve

(Please specify at the time of order if brazing adaptor is NOT required)
Flanged adaptor option is also available. Butterfly valve - Water Marked
Hydrant Valves / Millcocks are approved to 2419.2-2005 - Water Marked
Boosters Approval : AS 2419.3 & Water Marked System Complies to : AS 2419.1

Fire Australia Co Pty Ltd.
ABN No. 13165523713
47 Rushdale St. Knoxfield VIC-3180. Tel:(03) 9764 0020, Fax: (03) 9764 0023.
E-mail : sales@fireausco.com.au www.fireausco.com.au

150mm Dual Booster & Feed Hydrant Roll Groove with Single Detector Check Valve

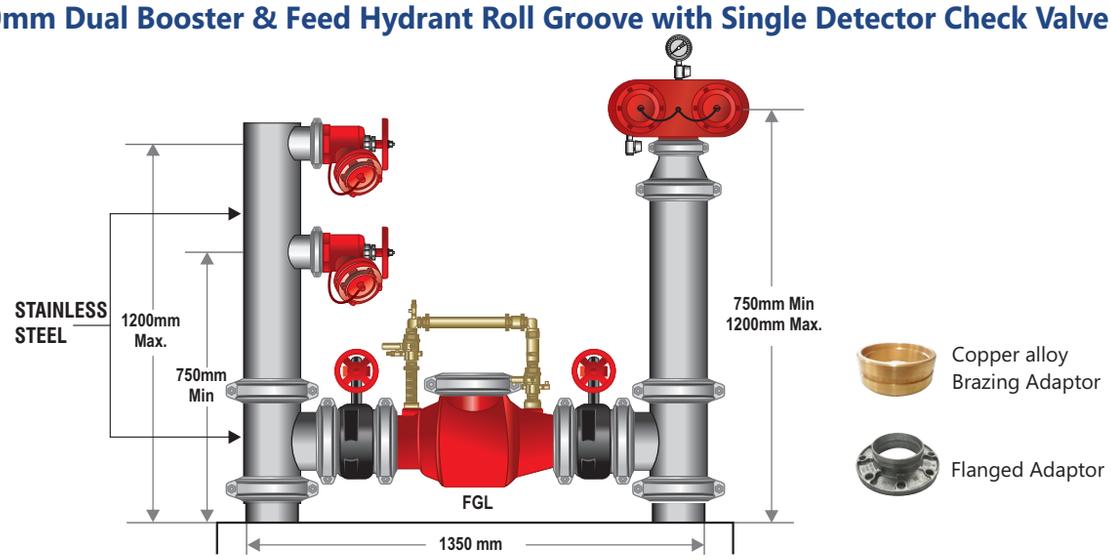

PART No	DESCRIPTION
203052	Dual Booster & Feed Hydrant R/G c/w Brazing Adaptor with Storz & Single Detector Check Valve South East Water
203053	Dual Booster & Feed Hydrant R/G c/w Brazing Adaptor with CFA & Single Detector Check Valve South East Water
203054	Dual Booster & Feed Hydrant R/G c/w Brazing Adaptor with Storz & Single Detector Check Valve City West Water
203055	Dual Booster & Feed Hydrant R/G c/w Brazing Adaptor with CFA & Single Detector Check Valve City West Water

(Please specify at the time of order if brazing adaptor is NOT required)
Flanged adaptor option is also available. Butterfly valve - Water Marked
Hydrant Valves / Millcocks are approved to 2419.2-2005 - Water Marked
Boosters Approval : AS 2419.3 & Water Marked System Complies to : AS 2419.1

Please Note :
The standard Dual Boosters supplied by Fire Australia Co. are rated to Class 14 & Class 21, as per AS2419.3
Class 35 Boosters are also available upon request. P.O.A.

150mm Dual Booster & Feed Hydrant Roll Groove with Metered Single Detector Check Valve

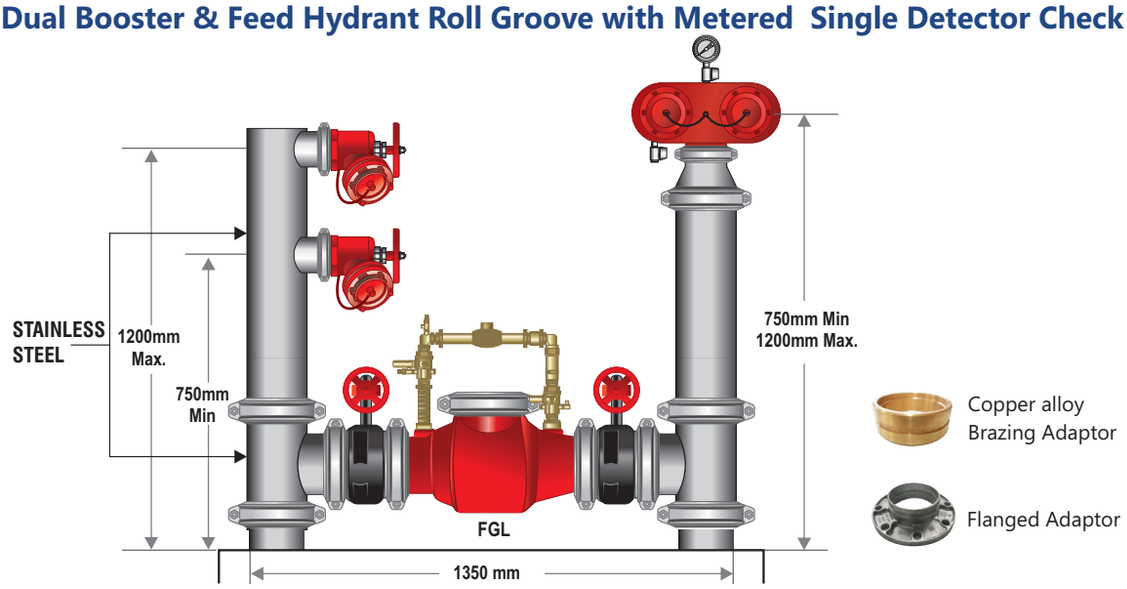

PART No	DESCRIPTION
203056	Dual Booster & Feed Hydrant R/G c/w Brazing Adaptor with Storz & Metered Single Detector Check Valve Yarra Valley Water
203057	Dual Booster & Feed Hydrant R/G c/w Brazing Adaptor with CFA & Metered Single Detector Check Valve Yarra Valley Water

(Please specify at the time of order if brazing adaptor is NOT required)
Flanged adaptor option is also available. Butterfly valve - Water Marked
Hydrant Valves / Millcocks are approved to 2419.2-2005 - Water Marked
Boosters Approval : AS 2419.3 & Water Marked System Complies to : AS 2419.1

Please Note :
The standard Dual Boosters supplied by Fire Australia Co. are rated to Class 14 & Class 21, as per AS2419.3
Class 35 Boosters are also available upon request. P.O.A.

Fire Australia Co Pty Ltd.
ABN No. 13165523713
47 Rushdale St. Knoxfield VIC-3180. Tel:(03) 9764 0020, Fax: (03) 9764 0023.
E-mail : sales@fireausco.com.au www.fireausco.com.au

FIRE AUSTRALIA CO

150mm Dual Booster & Feed Hydrant Roll Groove with Single Detector Check Valve & Booster valve

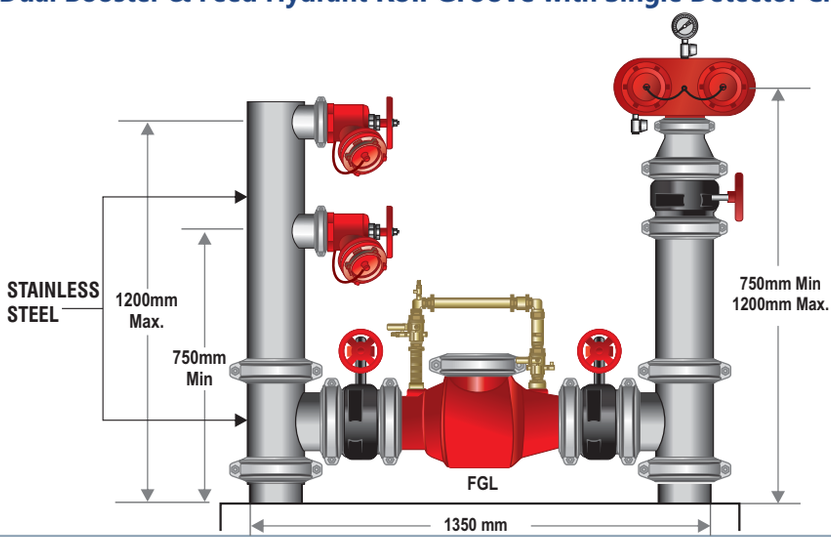

Copper alloy Brazing Adaptor

Flanged Adaptor

PART No	DESCRIPTION
203058	Dual Booster & Feed Hydrant R/G c/w Brazing Adaptor with Storz & Single Detector Check Valve & Booster Valve South East Water
203059	Dual Booster & Feed Hydrant R/G c/w Brazing Adaptor with CFA & Single Detector Check Valve & Booster Valve South East Water
203060	Dual Booster & Feed Hydrant R/G c/w Brazing Adaptor with Storz & Single Detector Check Valve & Booster Valve City West Water
203061	Dual Booster & Feed Hydrant R/G c/w Brazing Adaptor with CFA & Single Detector Check Valve & Booster Valve City West Water

(Please specify at the time of order if brazing adaptor is NOT required)
Flanged adaptor option is also available. Butterfly valve - Water Marked
Hydrant Valves / Millcocks are approved to 2419.2-2005 - Water Marked
Boosters Approval : AS 2419.3 & Water Marked System Complies to : AS 2419.1

Please Note :
The standard Dual Boosters supplied by Fire Australia Co. are rated to Class 14 & Class 21, as per AS2419.3
Class 35 Boosters are also available upon request. P.O.A.

150mm Dual Booster & Feed Hydrant Roll Groove with Metered Single Detector Check Valve & Booster valve

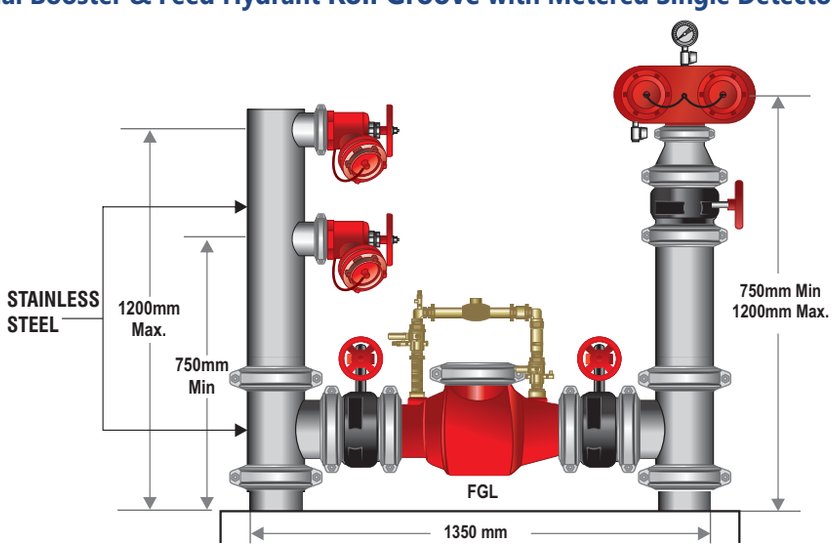

Copper alloy Brazing Adaptor

Flanged Adaptor

PART No	DESCRIPTION
203062	Dual Booster & Feed Hydrant R/G c/w Brazing Adaptor with Storz & Metered Single Detector Check Valve & Booster Valve Yarra Valley Water
203063	Dual Booster & Feed Hydrant R/G c/w Brazing Adaptor with CFA & Metered Single Detector Check Valve & Booster Valve Yarra Valley Water

(Please specify at the time of order if brazing adaptor is NOT required)
Flanged adaptor option is also available. Butterfly valve - Water Marked
Hydrant Valves / Millcocks are approved to 2419.2-2005 - Water Marked
Boosters Approval : AS 2419.3 & Water Marked System Complies to : AS 2419.1

Please Note :
The standard Dual Boosters supplied by Fire Australia Co. are rated to Class 14 & Class 21, as per AS2419.3
Class 35 Boosters are also available upon request. P.O.A.

150mm Quad Booster & Feed Hydrant Roll Groove with Single Detector Check Valve

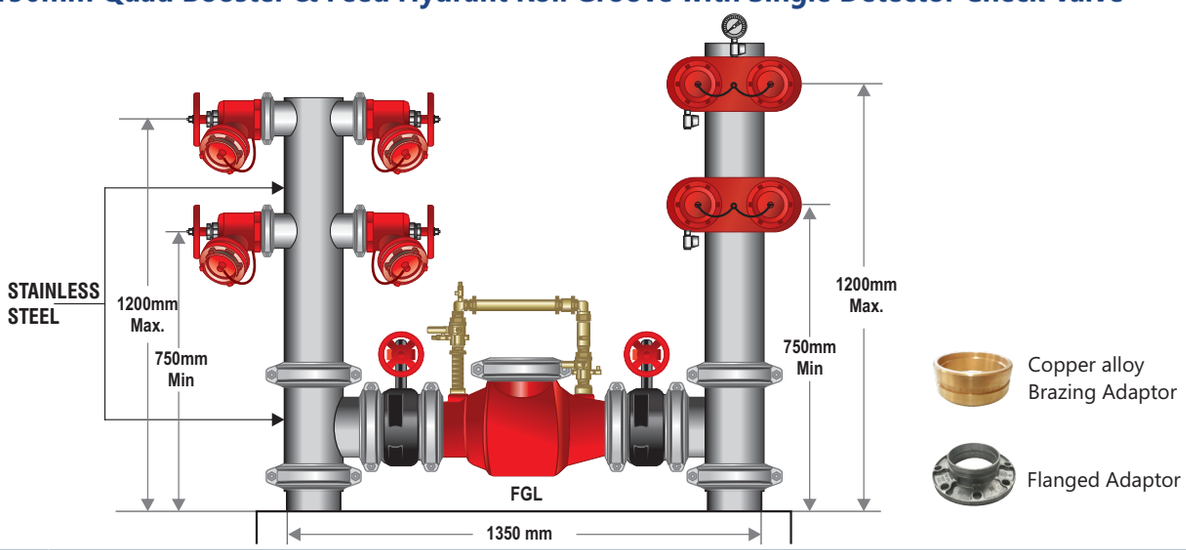

PART No	DESCRIPTION
203064	Quad Booster & Feed Hydrant R/G c/w Brazing Adaptor with Storz & Single Detector Check Valve South East Water
203065	Quad Booster & Feed Hydrant R/G c/w Brazing Adaptor with CFA & Single Detector Check Valve South East Water
203066	Quad Booster & Feed Hydrant R/G c/w Brazing Adaptor with Storz & Single Detector Check Valve City West Water
203067	Quad Booster & Feed Hydrant R/G c/w Brazing Adaptor with CFA & Single Detector Check Valve City West Water

(Please specify at the time of order if brazing adaptor is NOT required)
Flanged adaptor option is also available. Butterfly valve - Water Marked
Hydrant Valves / Millcocks are approved to 2419.2-2005 - Water Marked
Boosters Approval : AS 2419.3 & Water Marked System Complies to : AS 2419.1

Please Note :
The standard Dual Boosters supplied by Fire Australia Co. are rated to Class 14 & Class 21, as per AS2419.3
Class 35 Boosters are also available upon request. P.O.A.

150mm Quad Booster & Feed Hydrant Roll Groove with Metered Single Detector Check Valve

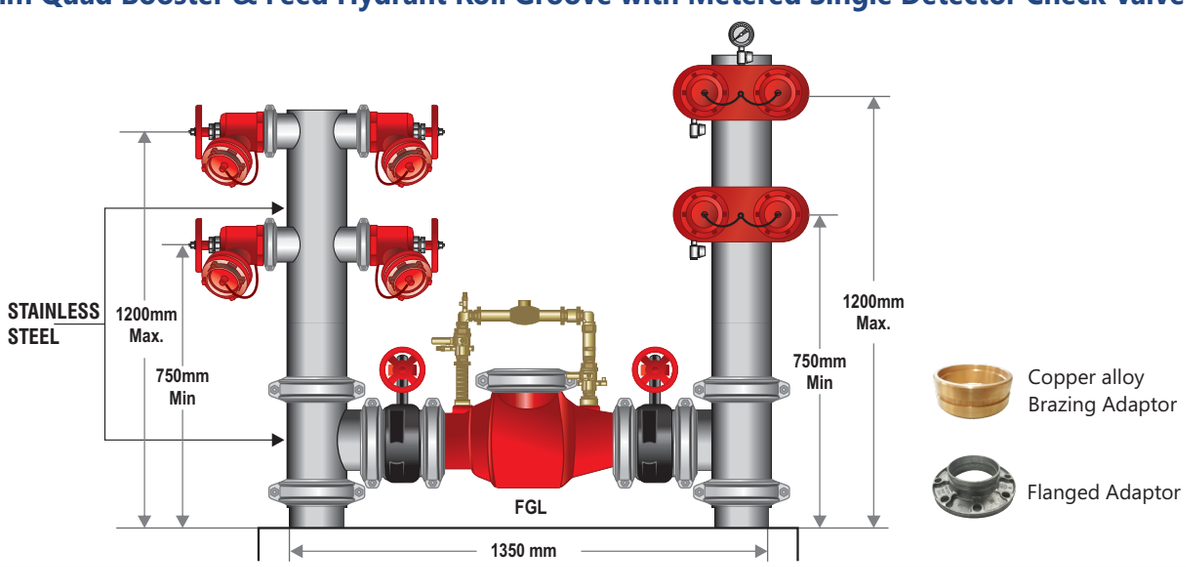

PART No	DESCRIPTION
203068	Quad Booster & Feed Hydrant R/G c/w Brazing Adaptor with Storz & Metered Single Detector Check Valve Yarra Valley Water
203069	Quad Booster & Feed Hydrant R/G c/w Brazing Adaptor with CFA & Metered Single Detector Check ValveYarra Valley Water

(Please specify at the time of order if brazing adaptor is NOT required)
Flanged adaptor option is also available. Butterfly valve - Water Marked
Hydrant Valves / Millcocks are approved to 2419.2-2005 - Water Marked
Boosters Approval : AS 2419.3 & Water Marked System Complies to : AS 2419.1

Please Note :
The standard Dual Boosters supplied by Fire Australia Co. are rated to Class 14 & Class 21, as per AS2419.3
Class 35 Boosters are also available upon request. P.O.A.

Fire Australia Co Pty Ltd.
ABN No. 13165523713
47 Rushdale St. Knoxfield VIC-3180. Tel:(03) 9764 0020, Fax: (03) 9764 0023.
E-mail : sales@fireausco.com.au www.fireausco.com.au

150mm Quad Booster (Compact Design) & Feed Hydrant Roll Groove with Single Detector Check Valve

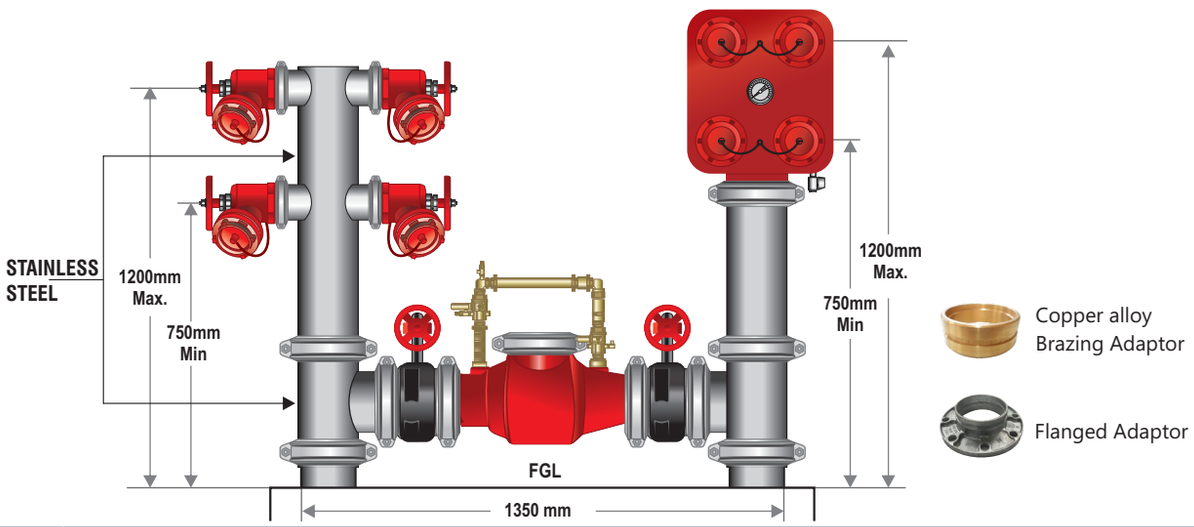

PART No	DESCRIPTION
203087	Quad Booster (Compact Design) & Feed Hydrant R/G c/w Brazing Adaptor with Storz & Single Detector Check Valve SEW
203088	Quad Booster (Compact Design) & Feed Hydrant R/G c/w Brazing Adaptor with CFA & Single Detector Check Valve SEW
203089	Quad Booster (Compact Design) & Feed Hydrant R/G c/w Brazing Adaptor with Storz & Single Detector Check Valve CWW
203090	Quad Booster (Compact Design) & Feed Hydrant R/G c/w Brazing Adaptor with CFA & Single Detector Check Valve CWW

(Please specify at the time of order if brazing adaptor is NOT required)
Flanged adaptor option is also available. Butterfly valve - Water Marked
Hydrant Valves / Millcocks are approved to 2419.2-2005 - Water Marked
Boosters Approval : AS 2419.3 & Water Marked System Complies to : AS 2419.1

SEW : South East Water
CWW : City West Water

150mm Quad Booster (Compact Design) & Feed Hydrant Roll Groove with Metered Single Detector Check Valve

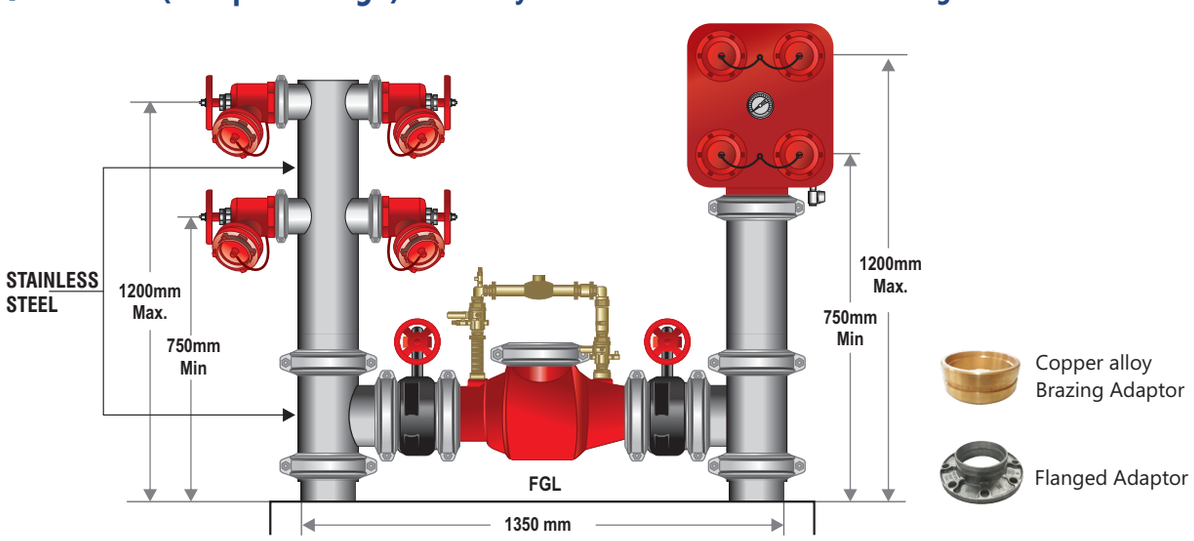

PART No	DESCRIPTION
203091	Quad Booster (Compact Design) & Feed Hydrant R/G c/w Brazing Adaptor with Storz & Metered Single Detector Check Valve Yarra Valley Water
203092	Quad Booster (Compact Design) & Feed Hydrant R/G c/w Brazing Adaptor with CFA & Metered Single Detector Check Valve Yarra Valley Water

(Please specify at the time of order if brazing adaptor is NOT required)
Flanged adaptor option is also available. Butterfly valve - Water Marked
Hydrant Valves / Millcocks are approved to 2419.2-2005 - Water Marked
Boosters Approval : AS 2419.3 & Water Marked System Complies to : AS 2419.1

Fire Australia Co Pty Ltd.
ABN No. 13165523713
47 Rushdale St. Knoxfield VIC-3180. Tel:(03) 9764 0020, Fax: (03) 9764 0023.
E-mail : sales@fireausco.com.au www.fireausco.com.au

150mm Quad Booster & Feed Hydrant Roll Groove with Single Detector Check Valve & Booster Valve

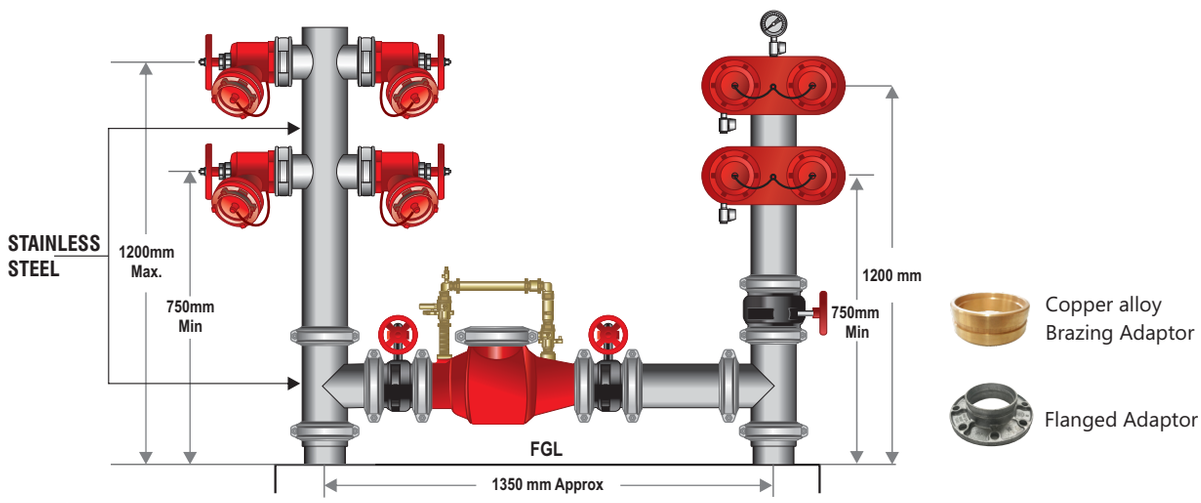

PART No	DESCRIPTION
203070	Quad Booster & Feed Hydrant R/G c/w Brazing Adaptor Storz & Single Detector Check Valve South East Water With Booster Valve
203071	Quad Booster & Feed Hydrant R/G c/w Brazing Adaptor CFA & Single Detector Check Valve South East Water With Booster Valve
203072	Quad Booster & Feed Hydrant R/G c/w Brazing Adaptor Storz & Single Detector Check Valve City West Water With Booster Valve
203073	Quad Booster & Feed Hydrant R/G c/w Brazing Adaptor CFA & Single Detector Check Valve City West Water With Booster Valve

(Please specify at the time of order if brazing adaptor is NOT required)
Flanged adaptor option is also available. Butterfly valve - Water Marked
Hydrant Valves / Millcocks are approved to 2419.2-2005 - Water Marked
Boosters Approval : AS 2419.3 & Water Marked System Complies to : AS 2419.1

Please Note :
The standard Dual Boosters supplied by Fire Australia Co. are rated to Class 14 & Class 21, as per AS2419.3
Class 35 Boosters are also available upon request. P.O.A.

150mm Quad Booster & Feed Hydrant Roll Groove with Metered Single Detector Check Valve & Booster Valve

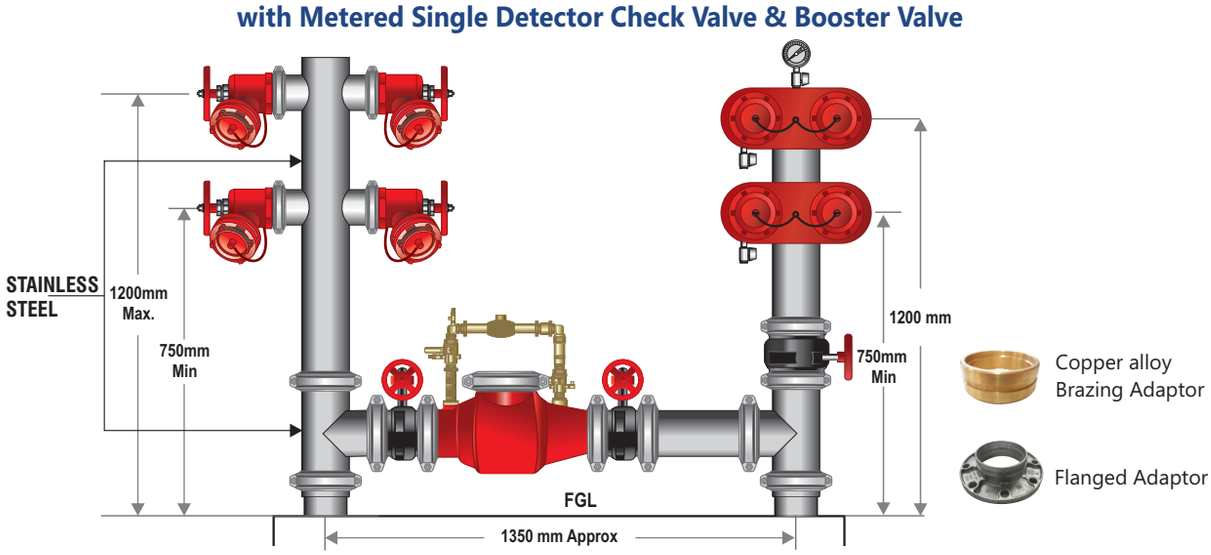

PART No	DESCRIPTION
203074	Quad Booster & Feed Hydrant R/G c/w Brazing Adaptor Storz & Single Detector Check Valve Yarra Valley Water With Booster Valve
203075	Quad Booster & Feed Hydrant R/G c/w Brazing Adaptor CFA & Single Detector Check Valve Yarra Valley Water With Booster Valve

(Please specify at the time of order if brazing adaptor is NOT required)
Flanged adaptor option is also available. Butterfly valve - Water Marked
Hydrant Valves / Millcocks are approved to 2419.2-2005 - Water Marked
Boosters Approval : AS 2419.3 & Water Marked System Complies to : AS 2419.1

Please Note :
The standard Dual Boosters supplied by Fire Australia Co. are rated to Class 14 & Class 21, as per AS2419.3
Class 35 Boosters are also available upon request. P.O.A.

Fire Australia Co Pty Ltd.
ABN No. 13165523713
47 Rushdale St. Knoxfield VIC-3180. Tel:(03) 9764 0020, Fax: (03) 9764 0023.
E-mail : sales@fireausco.com.au www.fireausco.com.au

FIRE AUSTRALIA CO

150mm Quad Booster (Compact Design) & Feed Hydrant Roll Groove with Single Detector Check Valve & Booster Valve

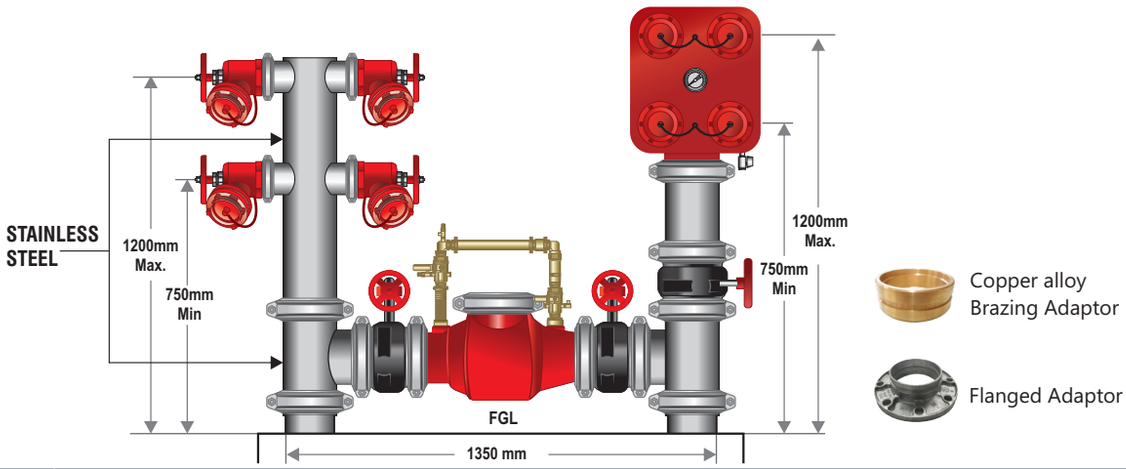

PART No	DESCRIPTION
203093	Quad Booster (Compact Design) & Feed Hydrant R/G c/w Brazing Adaptor Storz & Single Detector Check Valve South East Water With Booster Valve
203094	Quad Booster (Compact Design) & Feed Hydrant R/G c/w Brazing Adaptor CFA & Single Detector Check Valve South East Water With Booster Valve
203095	Quad Booster (Compact Design) & Feed Hydrant R/G c/w Brazing Adaptor Storz & Single Detector Check Valve City West Water With Booster Valve
203096	Quad Booster (Compact Design) & Feed Hydrant R/G c/w Brazing Adaptor CFA & Single Detector Check Valve City West Water With Booster Valve

(Please specify at the time of order if brazing adaptor is NOT required)
Flanged adaptor option is also available. Butterfly valve - Water Marked
Hydrant Valves / Millcocks are approved to 2419.2-2005 - Water Marked
Boosters Approval : AS 2419.3 & Water Marked System Complies to : AS 2419.1

150mm Quad Booster (Compact Design) & Feed Hydrant Roll Groove with Metered Single Detector Check Valve & Booster Valve

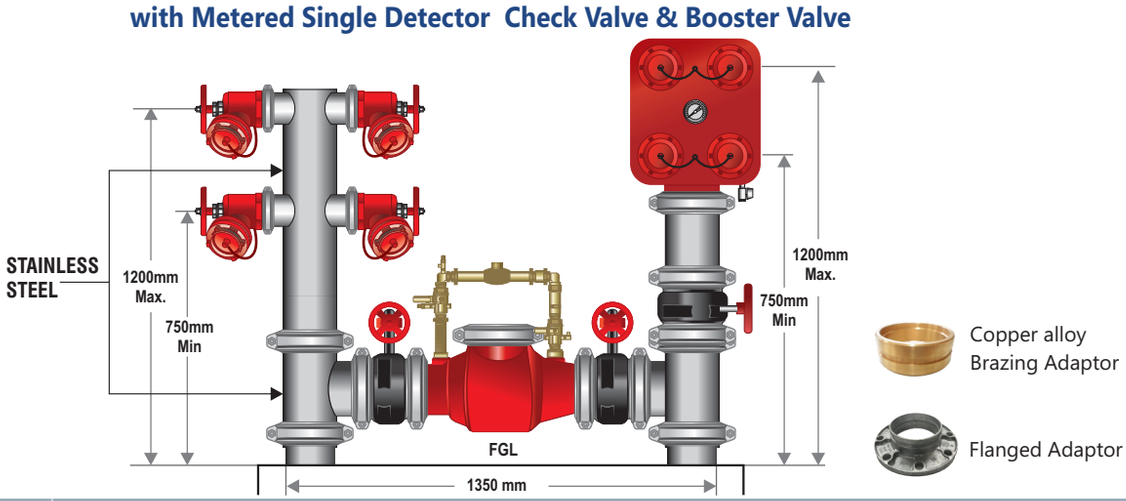

PART No	DESCRIPTION
203097	Quad Booster (Compact Design) & Feed Hydrant R/G c/w Brazing Adaptor Storz & Single Detector Check Valve Yarra Valley Water With Booster Valve
203098	Quad Booster (Compact Design) & Feed Hydrant R/G c/w Brazing Adaptor CFA & Single Detector Check Valve Yarra Valley Water With Booster Valve

(Please specify at the time of order if brazing adaptor is NOT required)
Flanged adaptor option is also available. Butterfly valve - Water Marked
Hydrant Valves / Millcocks are approved to 2419.2-2005 - Water Marked
Boosters Approval : AS 2419.3 & Water Marked System Complies to : AS 2419.1

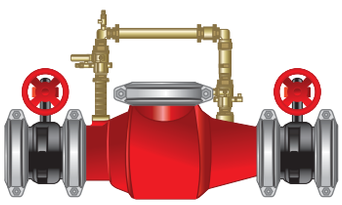

100mm Single Detector Check Valve Assembly

PART No	DESCRIPTION
203099	100mm Single Detector Check Valve Assembly With Butter Fly Valves-South East Water
203100	100mm Single Detector Check Valve Assembly With Butter Fly Valves-City West Water

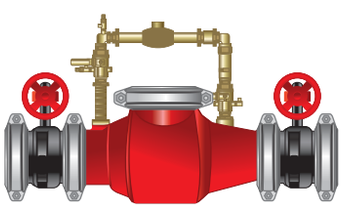

100mm Metered Single Detector Check Valve Assembly

PART No	DESCRIPTION
203101	100mm Single Detector Check Valve Assembly With Butter Fly Valves-Yarra Valley Water

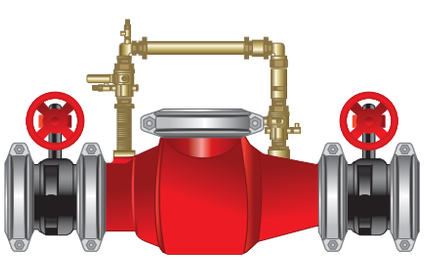

150mm Single Detector Check Valve Assembly

PART No	DESCRIPTION
203102	150mm Single Detector Check Valve Assembly With Butter Fly Valves-South East Water
203103	150mm Single Detector Check Valve Assembly With Butter Fly Valves-City West Water

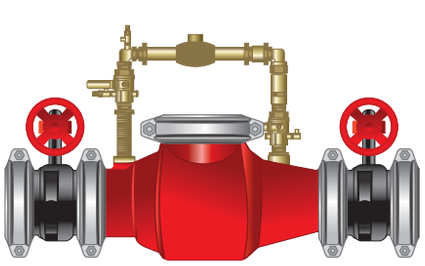

150mm Metered Single Detector Check Valve Assembly

PART No	DESCRIPTION
203104	150mm Single Detector Check Valve Assembly With Butter Fly Valves-Yarra Valley Water (sdcva150yvw)

Fire Australia Co Pty Ltd.
ABN No. 13165523713
47 Rushdale St. Knoxfield VIC-3180. Tel:(03) 9764 0020, Fax: (03) 9764 0023.
E-mail : sales@fireausco.com.au www.fireausco.com.au

FIRE AUSTRALIA CO

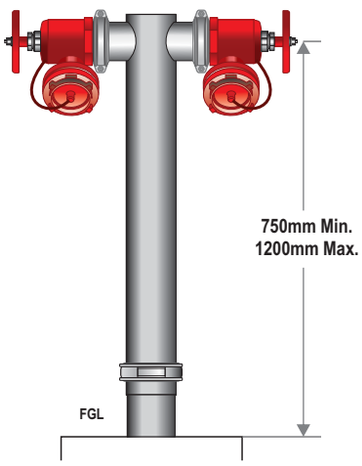

100mm Dual Hydrant Riser Roll Groove

PART No	DESCRIPTION
202005	Dual Hydrant Riser R/G with Storz c/w Brazing Adaptor
202006	Dual Hydrant Riser R/G with NSW FBT c/w Brazing Adaptor

(Please specify at the time of order if brazing adopter NOT required)

Flanged adaptor option is also available.

Hydrant Valve Approval : AS 2419.2, AS/NZS 4020 & Water Marked

Hydrant Riser Complies to : AS 2419.1

Copper alloy Brazing Adaptor

Flanged Adaptor

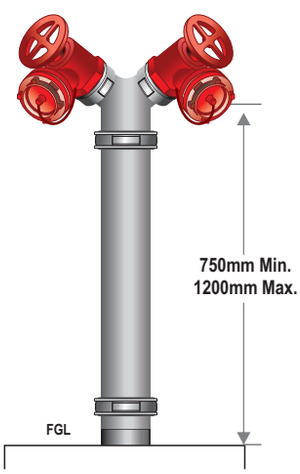

100mm Dual Hydrant Riser Roll Groove with Offset Tee

PART No	DESCRIPTION
202011	Dual Hydrant Riser R/G c/w Brazing Adaptor with Offset Tee & Storz
202012	Dual Hydrant Riser R/G c/w Brazing Adaptor with Offset Tee & NSW FBT

(Please specify at the time of order if brazing adopter NOT required)

Flanged adaptor option is also available.

Hydrant Valve Approval : AS 2419.2, AS/NZS 4020 & Water Marked

Hydrant Riser Complies to : AS 2419.1

Copper alloy brazing Adaptor

Flanged Adaptor

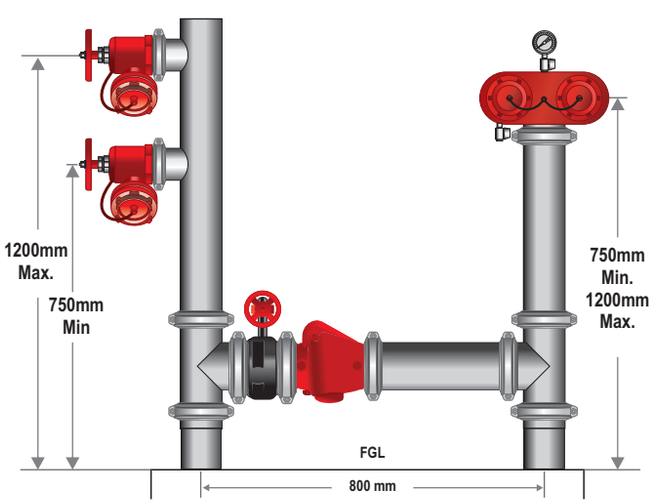

100mm Dual Booster & Feed Hydrant Roll Groove

PART No	DESCRIPTION
202021	Dual Booster & Feed Hydrant R/G with Storz c/w Brazing Adaptor
202022	Dual Booster & Feed Hydrant R/G with NSW FBT c/w Brazing Adaptor

(Please specify at the time of order if brazing adaptor is NOT required)

Flanged adaptor option is also available. Butterfly valve - Water Marked

Hydrant Valves / Millcocks are approved to 2419.2-2005 - Water Marked

Boosters Approval : AS 2419.3 & Water Marked System Complies to : AS 2419.1

Please Note :

The standard Dual Boosters supplied by Fire Australia Co. are rated to Class 14 & Class 21, as per AS2419.3

Class 35 Boosters are also available upon request. P.O.A.

Copper alloy brazing Adaptor

Flanged Adaptor

150mm Quad Booster & Feed Hydrant Roll Groove

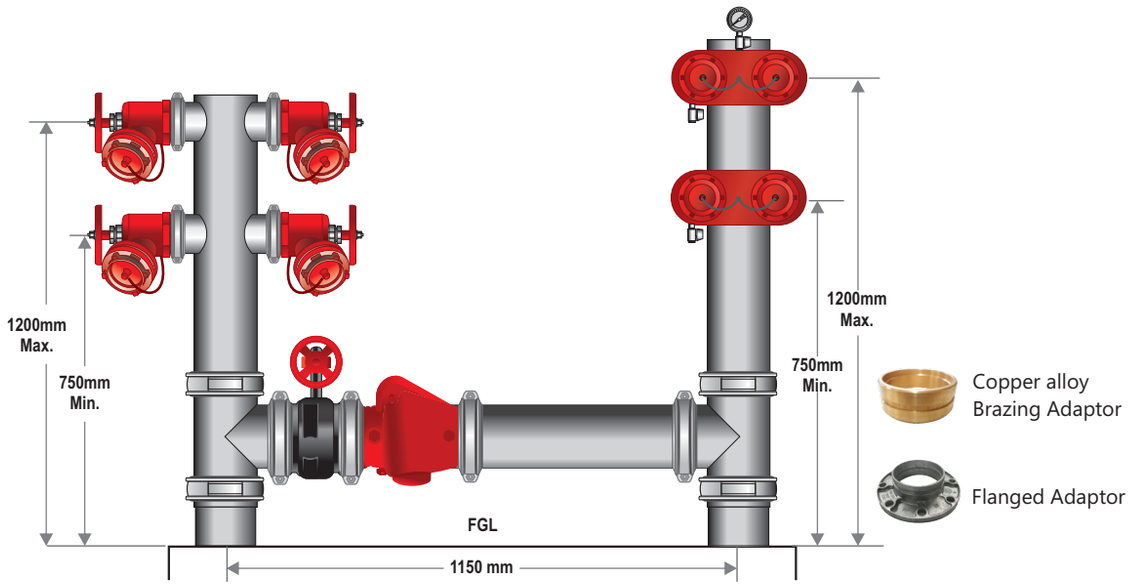

PART No	DESCRIPTION
202033	Quad Booster & Feed Hydrant R/G with Storz c/w Brazing Adaptor
202034	Quad Booster & Feed Hydrant R/G with NSW FBT c/w Brazing Adaptor

(Please specify at the time of order if brazing adaptor is NOT required)
Flanged adaptor option is also available. Butterfly valve - Water Marked
Hydrant Valves / Millcocks are approved to 2419.2-2005 - Water Marked
Boosters Approval : AS 2419.3 & Water Marked System Complies to : AS 2419.1

Please Note :
The standard Dual Boosters supplied by Fire Australia Co. are rated to Class 14 & Class 21, as per AS2419.3
Class 35 Boosters are also available upon request. P.O.A.

150mm Quad Booster (Compact Design) & Feed Hydrant Roll Groove

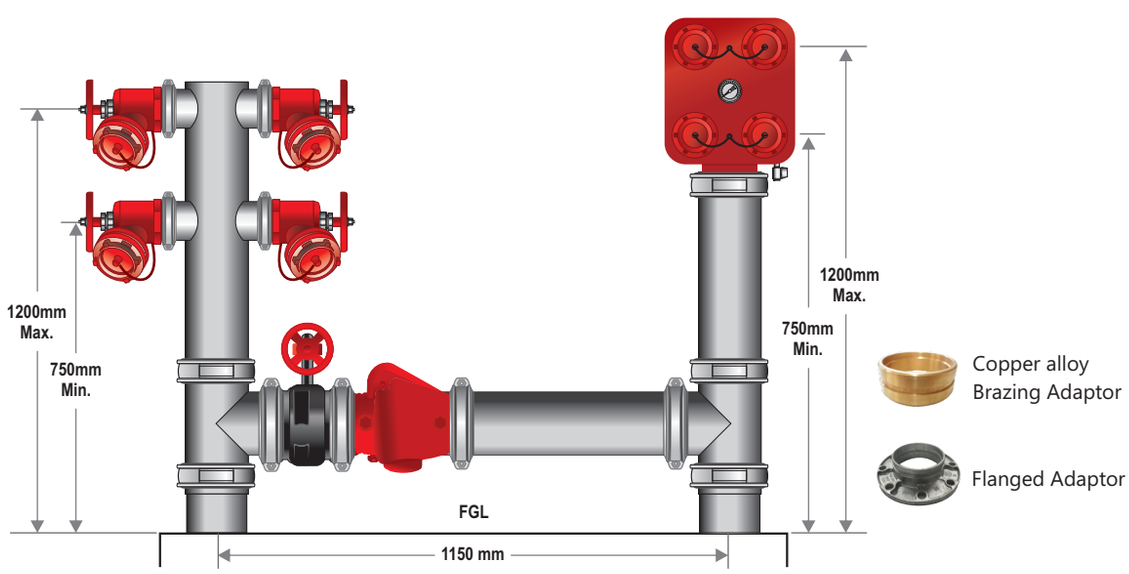

PART No	DESCRIPTION
202041	Quad Booster (Compact Design) & Feed Hydrant R/G with Storz c/w Brazing Adaptor
202042	Quad Booster (Compact Design) & Feed Hydrant R/G with NSW FBT c/w Brazing Adaptor

(Please specify at the time of order if brazing adaptor is NOT required)
Flanged adaptor option is also available. Butterfly valve - Water Marked
Hydrant Valves / Millcocks are approved to 2419.2-2005 - Water Marked
Boosters Approval : AS 2419.3 & Water Marked System Complies to : AS 2419.1

Fire Australia Co Pty Ltd.
ABN No. 13165523713
47 Rushdale St. Knoxfield VIC-3180. Tel:(03) 9764 0020, Fax: (03) 9764 0023.
E-mail : sales@fireausco.com.au www.fireausco.com.au

FIRE AUSTRALIA CO

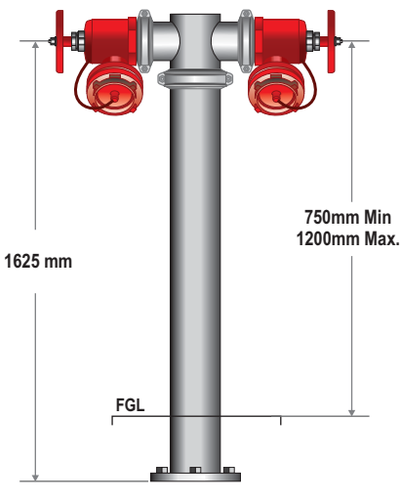

100mm Dual Hydrant Riser

PART No	DESCRIPTION
204001	Dual Hydrant Riser Flanged with Storz
204002	Dual Hydrant Riser Flanged with QLD FBT

Red Powder coated option available on request,
please specify at the time of order.
Hydrant Valve Approval : AS 2419.2, AS/NZS 4020 & Water Marked
Hydrant Riser Complies to : AS 2419.1

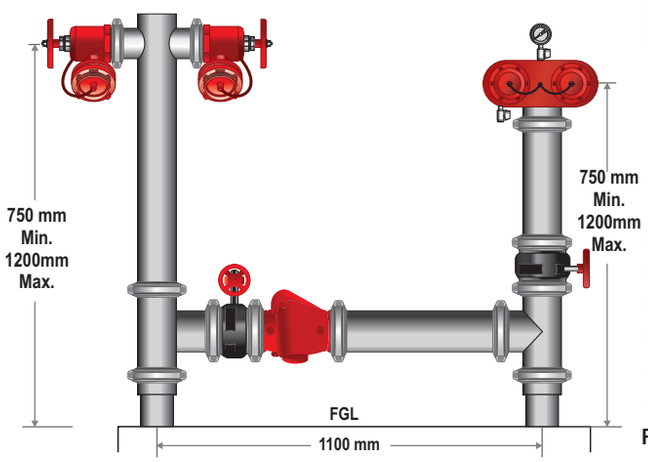

100mm Dual Booster & Feed Hydrant Roll Groove

PART No	DESCRIPTION
204003	Dual Booster & Feed Hydran R/Gt with Storz c/w Brazing Adaptor
204004	Dual Booster & Feed Hydrant R/G with QLD FBT c/w Brazing Adaptor

(Please specify at the time of order if brazing adaptor is NOT required)
Flanged adaptor option is also available.
Butterfly valve - Water Marked
Hydrant Valves / Millcocks are approved to 2419.2-2005 - Water Marked
Boosters Approval : AS 2419.3 & Water Marked
System Complies to : AS 2419.1
Please Note : The standard Dual Boosters supplied by Fire Australia Co. are rated to Class 14 & Class 21, as per AS2419.3 Class 35 Boosters are also available upon request. P.O.A.

Copper alloy brazing Adaptor

Flanged Adaptor

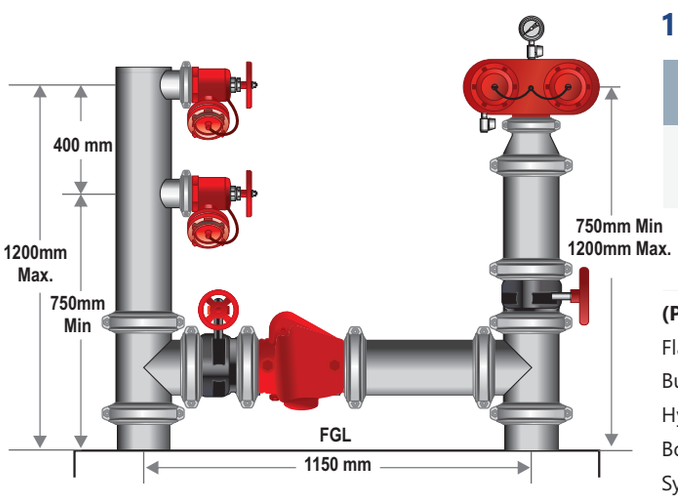

150mm Dual Booster & Feed Hydrant Roll Groove

PART No	DESCRIPTION
204005	Dual Booster & Feed Hydrant R/G with Storz c/w Brazing Adaptor
204006	Dual Booster & Feed Hydrant R/G with QLD FBT c/w Brazing Adaptor

(Please specify at the time of order if brazing adaptor is NOT required)
Flanged adaptor option is also available.
Butterfly valve - Water Marked
Hydrant Valves / Millcocks are approved to 2419.2-2005 - Water Marked
Boosters Approval : AS 2419.3 & Water Marked
System Complies to : AS 2419.1
Please Note : The standard Dual Boosters supplied by Fire Australia Co. are rated to Class 14 & Class 21, as per AS2419.3 Class 35 Boosters are also available upon request. P.O.A.

Copper alloy brazing Adaptor

Flanged Adaptor

150mm Quad Booster & Feed Hydrant Roll Groove

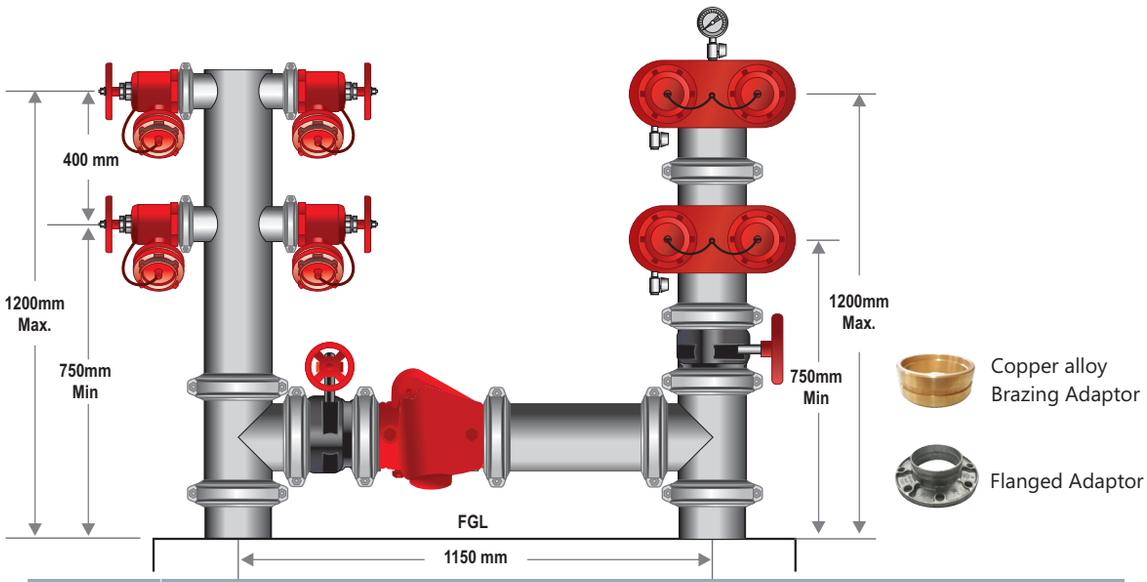

PART No	DESCRIPTION
204011	Quad Booster & Feed Hydrant R/G with Storz c/w Brazing Adaptor
204012	Quad Booster & Feed Hydrant R/G with QLD FBT c/w Brazing Adaptor

(Please specify at the time of order if brazing adaptor is NOT required)
Flanged adaptor option is also available. Butterfly valve - Water Marked
Hydrant Valves / Millcocks are approved to 2419.2-2005 - Water Marked
Boosters Approval : AS 2419.3 & Water Marked System Complies to : AS 2419.1

Please Note :
The standard Dual Boosters supplied by Fire Australia Co. are rated to Class 14 & Class 21, as per AS2419.3
Class 35 Boosters are also available upon request. P.O.A.

150mm Quad Booster (Compact Design) & Feed Hydrant Roll Groove

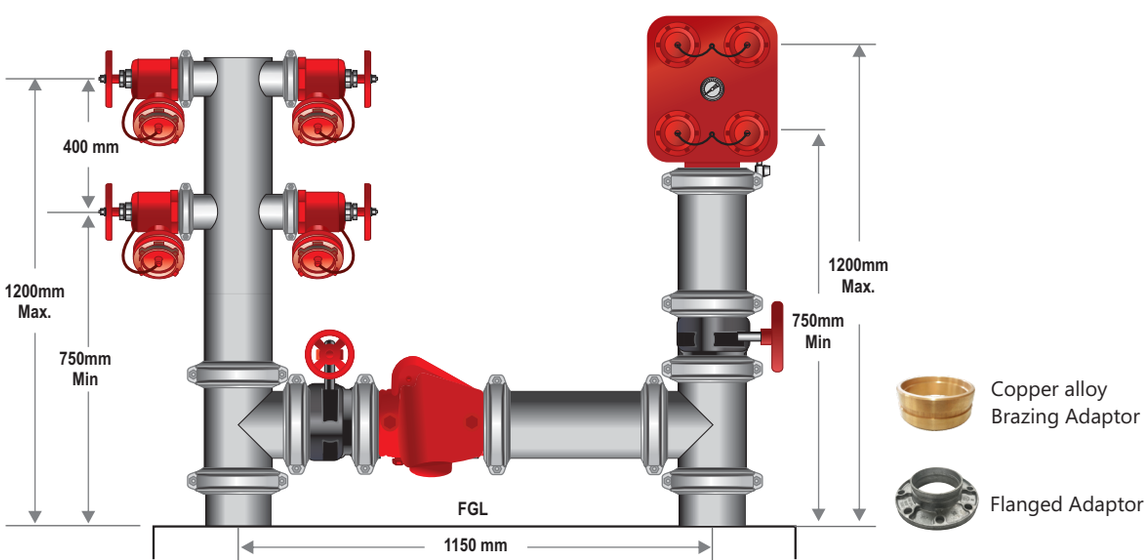

PART No	DESCRIPTION
204015	Quad Booster (Compact Design) & Feed Hydrant R/G with Storz c/w Brazing Adaptor
204016	Quad Booster (Compact Design) & Feed Hydrant R/G with QLD FBT c/w Brazing Adaptor

(Please specify at the time of order if brazing adaptor is NOT required)
Flanged adaptor option is also available. Butterfly valve - Water Marked
Hydrant Valves / Millcocks are approved to 2419.2-2005 - Water Marked
Boosters Approval : AS 2419.3 & Water Marked System Complies to : AS 2419.1

Fire Australia Co Pty Ltd.
ABN No. 13165523713
47 Rushdale St. Knoxfield VIC-3180. Tel:(03) 9764 0020, Fax: (03) 9764 0023.
E-mail : sales@fireausco.com.au www.fireausco.com.au

FIRE AUSTRALIA CO

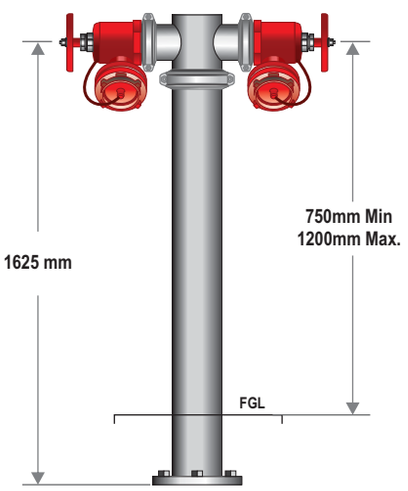

100mm Dual Hydrant Riser

PART No	DESCRIPTION
205001	Dual Hydrant Riser Flanged with Storz
205002	Dual Hydrant Riser Flanged with SA FBT

Red Powder coated option available on request,
please specify at the time of order.
Hydrant Valve Approval : AS 2419.2, AS/NZS 4020 & Water Marked
Hydrant Riser Complies to : AS 2419.1

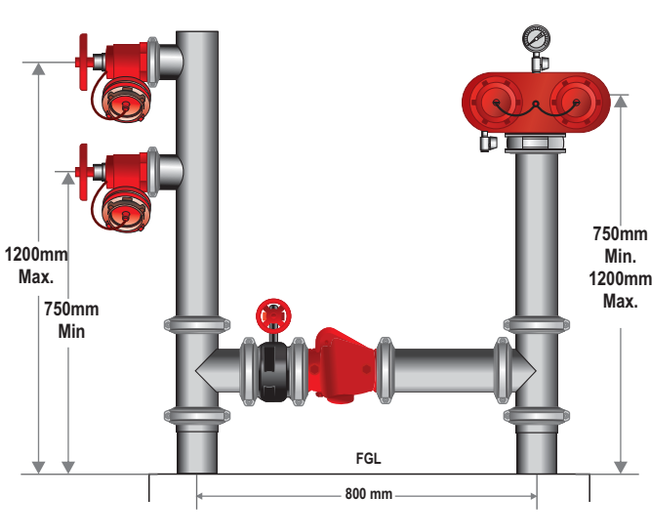

100mm Dual Booster & Feed Hydrant Roll Groove

PART No	DESCRIPTION
205003	Dual Booster & Feed Hydrant R/G with Storz c/w Brazing Adaptor
205004	Dual Booster & Feed Hydrant with SA FBT c/w Brazing Adaptor

(Please specify at the time of order if brazing adaptor is NOT required)

Flanged adaptor option is also available.
Butterfly valve - Water Marked
Hydrant Valves / Millcocks are approved to 2419.2-2005 - Water Marked
Boosters Approval : AS 2419.3 & Water Marked
System Complies to : AS 2419.1

Please Note :
The standard Dual Boosters supplied by Fire Australia Co. are rated to Class 14 & Class 21, as per AS2419.3
Class 35 Boosters are also available upon request. P.O.A.

Copper alloy brazing Adaptor

Flanged Adaptor

150mm Quad Booster & Feed Hydrant Roll Groove

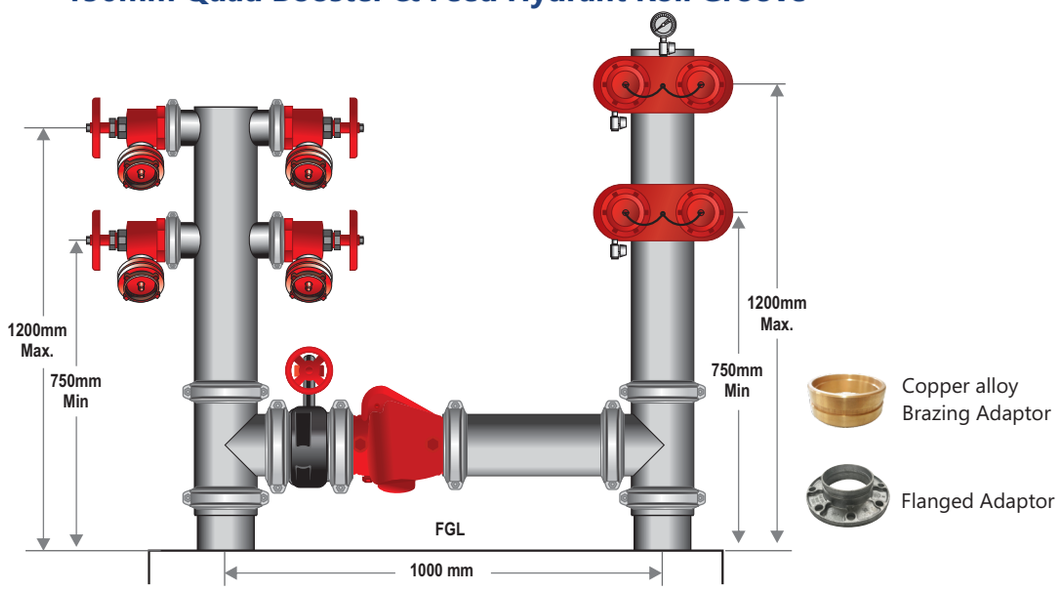

PART No	DESCRIPTION
205009	Quad Booster & Feed Hydrant R/G with Storz c/w Brazing Adaptor
205010	Quad Booster & Feed Hydrant R/G with SA FBT c/w Brazing Adaptor

(Please specify at the time of order if brazing adaptor is NOT required)
Flanged adaptor option is also available. Butterfly valve - Water Marked
Hydrant Valves / Millcocks are approved to 2419.2-2005 - Water Marked
Boosters Approval : AS 2419.3 & Water Marked System Complies to : AS 2419.1

Please Note :
The standard Dual Boosters supplied by Fire Australia Co. are rated to Class 14 & Class 21, as per AS2419.3
Class 35 Boosters are also available upon request. P.O.A.

150mm Quad Booster (Compact Design) & Feed Hydrant Roll Groove

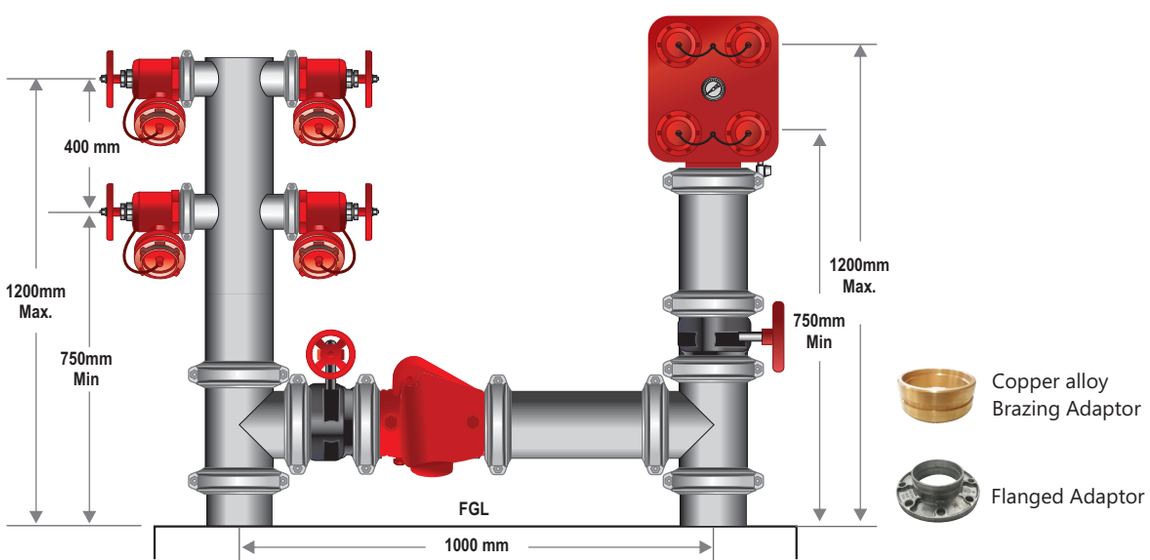

PART No	DESCRIPTION
205015	Quad Booster (Compact Design) & Feed Hydrant R/G with Storz c/w Brazing Adaptor
205016	Quad Booster (Compact Design) & Feed Hydrant R/G with SA FBT c/w Brazing Adaptor

(Please specify at the time of order if brazing adaptor is NOT required)
Flanged adaptor option is also available. Butterfly valve - Water Marked
Hydrant Valves / Millcocks are approved to 2419.2-2005 - Water Marked
Boosters Approval : AS 2419.3 & Water Marked System Complies to : AS 2419.1

Fire Australia Co Pty Ltd.
ABN No. 13165523713
47 Rushdale St. Knoxfield VIC-3180. Tel:(03) 9764 0020, Fax: (03) 9764 0023.
E-mail : sales@fireausco.com.au www.fireausco.com.au

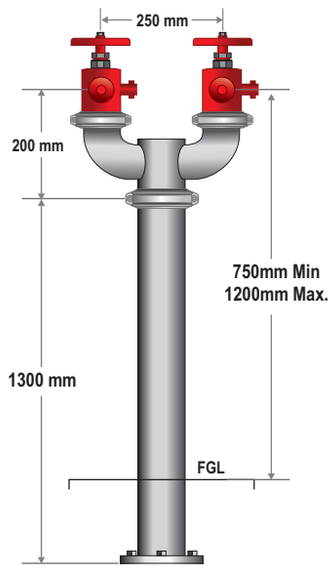

100mm Dual Hydrant Riser - BI

PART No	DESCRIPTION
206002	100 mm Dual Hydrant Riser Flanged with BI Hydrant Valves / Millcock / Landing Valve

Red Powder coated option available on request,
please specify at the time of order.
Hydrant Valve Approval : AS 2419.2, AS/NZS 4020 & Water Marked
Hydrant Riser Complies to : AS 2419.1

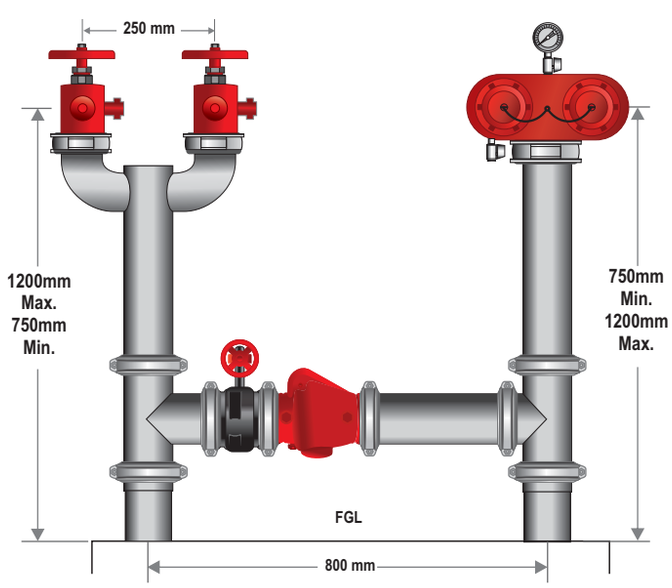

100mm Dual Booster & Feed Hydrant Roll Groove - BI

PART No	DESCRIPTION
206004	Dual Booster & Feed Hydrant R/G with BI c/w Brazing Adaptor

(Please specify at the time of order if brazing adaptor is NOT required)

Flanged adaptor option is also available.
Butterfly valve - Water Marked
Hydrant Valves / Millcocks are approved to 2419.2-2005 - Water Marked
Boosters Approval : AS 2419.3 & Water Marked
System Complies to : AS 2419.1

Please Note :
The standard Dual Boosters supplied by Fire Australia Co. are rated to Class 14 & Class 21, as per AS2419.3
Class 35 Boosters are also available upon request. P.O.A.

Copper alloy brazing Adaptor

Flanged Adaptor

150mm Quad Booster & Feed Hydrant Roll Groove - BI

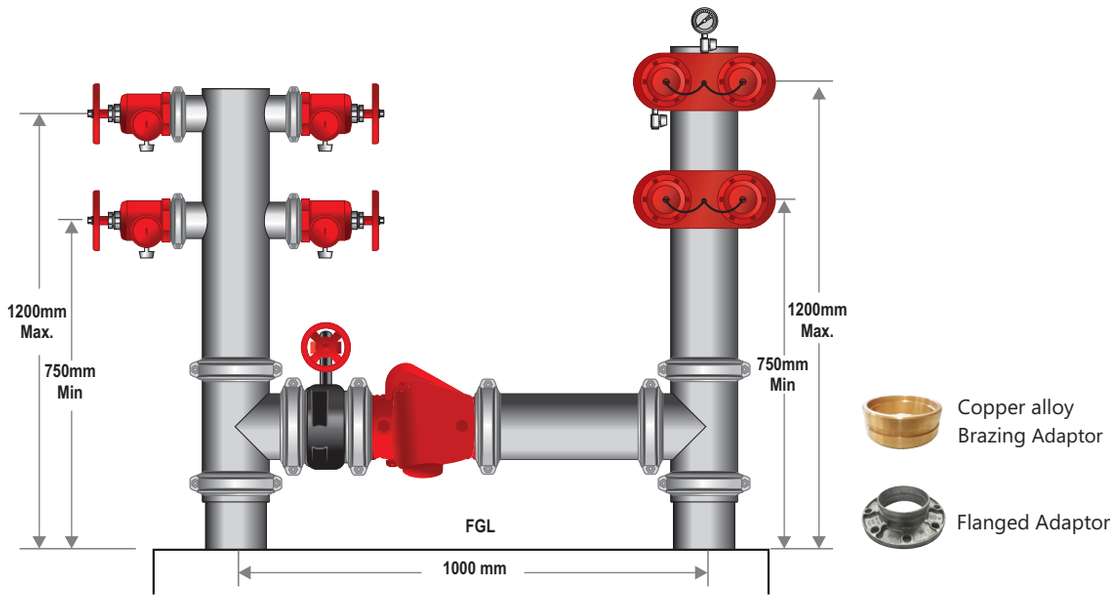

PART No	DESCRIPTION
206010	Quad Booster & Feed Hydrant R/G with BI c/w Brazing Adaptor

(Please specify at the time of order if brazing adaptor is NOT required)
Flanged adaptor option is also available. Butterfly valve - Water Marked
Hydrant Valves / Millcocks are approved to 2419.2-2005 - Water Marked
Boosters Approval : AS 2419.3 & Water Marked System Complies to : AS 2419.1

Please Note :
The standard Dual Boosters supplied by Fire Australia Co. are rated to Class 14 & Class 21, as per AS2419.3
Class 35 Boosters are also available upon request. P.O.A.

150mm Quad Booster (Compact Design) & Feed Hydrant Roll Groove - BI

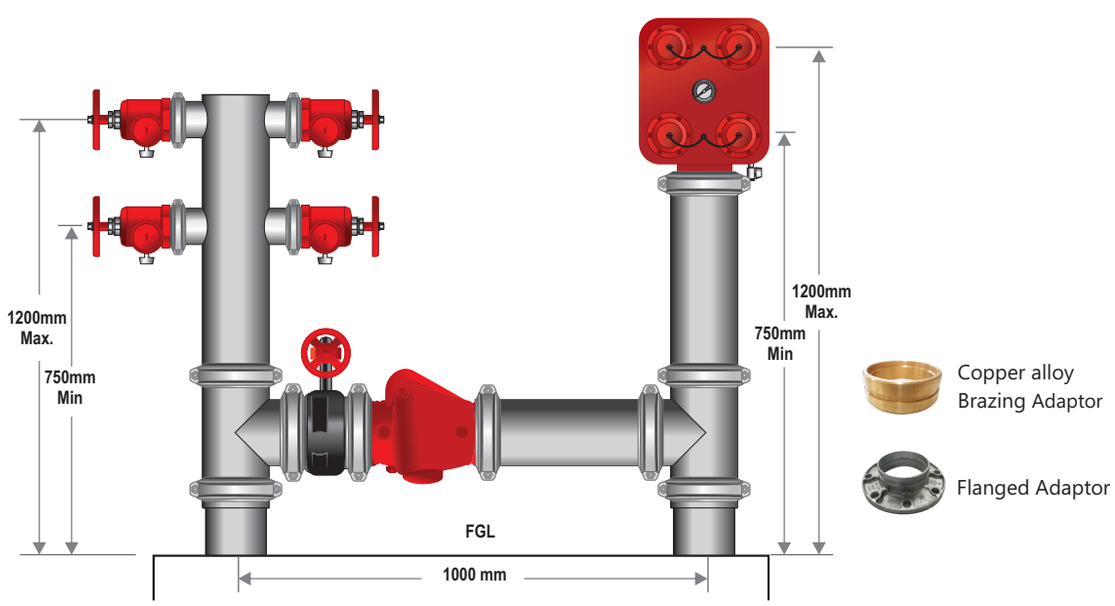

PART No	DESCRIPTION
206016	Quad Booster (Compact Design) & Feed Hydrant R/G with BI c/w Brazing Adaptor

(Please specify at the time of order if brazing adaptor is NOT required)
Flanged adaptor option is also available. Butterfly valve - Water Marked
Hydrant Valves / Millcocks are approved to 2419.2-2005 - Water Marked
Boosters Approval : AS 2419.3 & Water Marked System Complies to : AS 2419.1

Fire Australia Co Pty Ltd.
ABN No. 13165523713
47 Rushdale St. Knoxfield VIC-3180. Tel:(03) 9764 0020, Fax: (03) 9764 0023.
E-mail : sales@fireausco.com.au www.fireausco.com.au

FIRE AUSTRALIA CO

150 mm Tank Suction Assembly with R/G Bottom Inlet

PART No	NOMINAL SIZE (mm)
139001	Assembly With 150 mm Gear Operated Butterfly Valves or 150 mm Sluice/Gate Valve Option are available with or without support arrangement 150 mm Storz to 65 Storz with cap Options are available

Different combinations of 150 mm Storz to 65 mm Storz connections are available. Please specify at the time of order.

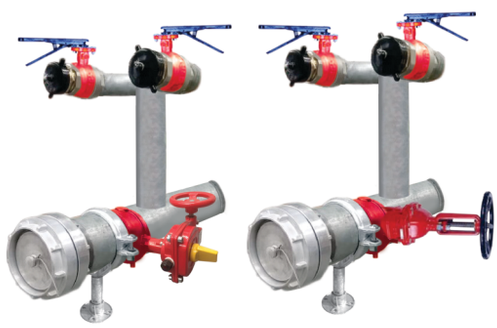

150 mm Tank Suction Assembly with R/G Back Inlet

PART No	NOMINAL SIZE (mm)
139081	Assembly With 150mm Gear Operated Butterfly Valves with or without support arrangement 150mm Storz to 65 Storz with cap Options are available
139082	Assembly With 150mm Sluice/Gate Valve with or without support arrangement 150mm Storz to 65 Storz with cap Options are available

Different combinations of 150 mm Storz to 65 mm Storz connections are available. Please specify at the time of order.

Pipe Support Flanges For Tank Suction

PART No	NOMINAL SIZE (mm)
139089	50mm Pipe Support Flange
139090	65mm Pipe Support Flange
139091	80mm Pipe Support Flange
139092	100mm Pipe Support Flange
139093	150mm Pipe Support Flange

Adjustable Pipe Support For Tank Suction

PART No	NOMINAL SIZE (mm)
139094	Adjustable Pipe Supports For 100mm Pipes
139095	Adjustable Pipe Supports For 150mm Pipes
139096	Adjustable Pipe Supports For 200mm To 300mm Pipes

Storz Tree Adaptor - Aluminium Storz Fittings are Forged

PART No.	DESCRIPTION
128426	150mm-125mm-100mm-90mm-75mm-65mm with 65mm Cap
128427	125mm-100mm-90mm-75mm-65mm with 65mm Cap
128428	100mm-90mm-75mm-65mm with 65mm cap
128429	90mm-75mm-65mm with 65mm Cap
128430	75mm-65mm with 65mm Cap
128431	150x125x100x90x75 with 75mm Cap
128432	150x125x100x90 with 90mm Cap
128433	150x125x100 with 100mm Cap
128434	150x125 with 125mm Cap Forged

VALVES

- BRASS VALVES 41 - 44
- BOOSTER HEAD & ACCESSORIES 34 - 35
- CAST IRON VALVES 39 - 40
- FIRE SERVICE ROLL GROOVE & FLANGED VALVES 29 - 33
- HYDRANT VALVES / MILLCOCKS / LANDING VALVES & ACCESSORIES 36 - 38
- KNIFE GATE VALVES 48
- PVC BALL VALVES 49
- STAINLESS STEEL VALVES 45 - 48

FIRE AUSTRALIA CO

OS&Y Grooved
Resilient Seat Gate Valve(300 PSI)-UL/FM Approved

PART No	DESCRIPTION
201001	Gate Valve OS&Y 50mm Grooved
201002	Gate Valve OS&Y 65mm Grooved
201003	Gate Valve OS&Y 80mm Grooved
201004	Gate Valve OS&Y 100mm Grooved
201005	Gate Valve OS&Y 125mm Grooved
201006	Gate Valve OS&Y 150mm Grooved
201007	Gate Valve OS&Y 200mm Grooved
	MONITORED VALVES
201008	Gate Valve Monitored OS&Y 50mm Grooved
201009	Gate Valve Monitored OS&Y 65mm Grooved
201010	Gate Valve Monitored OS&Y 80mm Grooved
201011	Gate Valve Monitored OS&Y 100mm Grooved
201012	Gate Valve Monitored OS&Y 125mm Grooved
201013	Gate Valve Monitored OS&Y 150mm Grooved
201014	Gate Valve Monitored OS&Y 200mm Grooved

OS&Y Flanged
Resilient Seat Gate Valve(300 PSI)-UL/FM Approved

PART No	DESCRIPTION
201015	Gate Valve OS&Y 50mm Flanged
201016	Gate Valve OS&Y 65mm Flanged
201017	Gate Valve OS&Y 80mm Flanged
201018	Gate Valve OS&Y 100mm Flanged
201019	Gate Valve OS&Y 125mm Flanged
201020	Gate Valve OS&Y 150mm Flanged
201021	Gate Valve OS&Y 200mm Flanged
	MONITORED VALVES
201022	Gate Valve Monitored OS&Y 50mm Flanged
201023	Gate Valve Monitored OS&Y 65mm Flanged
201024	Gate Valve Monitored OS&Y 80mm Flanged
201025	Gate Valve Monitored OS&Y 100mm Flanged
201026	Gate Valve Monitored OS&Y 125mm Flanged
201027	Gate Valve Monitored OS&Y 150mm Flanged
201028	Gate Valve Monitored OS&Y 200mm Flanged

OS&Y Flanged x Grooved
Resilient Seat Gate Valve(300 PSI)-UL/FM Approved

PART No	DESCRIPTION
201029	Gate Valve OS&Y 50mm Flanged & Grooved
201030	Gate Valve OS&Y 65mm Flanged & Grooved
201031	Gate Valve OS&Y 80mm Flanged & Grooved
201032	Gate Valve OS&Y 100mm Flanged & Grooved
201033	Gate Valve OS&Y 125mm Flanged & Grooved
201034	Gate Valve OS&Y 150mm Flanged & Grooved
201035	Gate Valve OS&Y 200mm Flanged & Grooved
	MONITORED VALVES
201036	Gate Valve Monitored OS&Y 50mm Flanged & Grooved
201037	Gate Valve Monitored OS&Y 65mm Flanged & Grooved
201038	Gate Valve Monitored OS&Y 80mm Flanged & Grooved
201039	Gate Valve Monitored OS&Y 100mm Flanged & Grooved
201040	Gate Valve Monitored OS&Y 125mm Flanged & Grooved
201041	Gate Valve Monitored OS&Y 150mm Flanged & Grooved
201042	Gate Valve Monitored OS&Y 200mm Flanged & Grooved

NRS Grooved Resilient Seat Gate Valve(300 PSI)-UL/FM Approved

PART No	DESCRIPTION
201043	Gate Valve NRS 50mm Grooved
201044	Gate Valve NRS 65mm Grooved
201045	Gate Valve NRS 80mm Grooved
201046	Gate Valve NRS 100mm Grooved
201047	Gate Valve NRS 125mm Grooved
201048	Gate Valve NRS 150mm Grooved
201049	Gate Valve NRS 200mm Grooved

NRS Flanged Resilient Seat Gate Valve(300 PSI)-UL/FM Approved

PART No	DESCRIPTION
201050	Gate Valve NRS 50mm Flanged
201051	Gate Valve NRS 65mm Flanged
201052	Gate Valve NRS 80mm Flanged
201053	Gate Valve NRS 100mm Flanged
201054	Gate Valve NRS 125mm Flanged
201055	Gate Valve NRS 150mm Flanged
201056	Gate Valve NRS 200mm Flanged

NRS Flanged x Grooved
Resilient Seat Gate Valve(300 PSI)-UL/FM Approved

PART No	DESCRIPTION
201057	Gate Valve NRS 50mm Flanged & Grooved
201058	Gate Valve NRS 65mm Flanged & Grooved
201059	Gate Valve NRS 80mm Flanged & Grooved
201060	Gate Valve NRS 100mm Flanged & Grooved
201061	Gate Valve NRS 125mm Flanged & Grooved
201062	Gate Valve NRS 150mm Flanged & Grooved
201063	Gate Valve NRS 200mm Flanged & Grooved

Fire Australia Co Pty Ltd.
ABN No. 13165523713
47 Rushdale St. Knoxfield VIC-3180. Tel:(03) 9764 0020, Fax: (03) 9764 0023.
E-mail : sales@fireausco.com.au www.fireausco.com.au

FIRE AUSTRALIA CO

Butterfly Valve Grooved DI (300 PSI) with Tamper Switch -UL/FM Approved

PART No	DESCRIPTION
201064	B/Fly Gear Operated Valve 50mm R/G with TS 300 PSI
201065	B/Fly Gear Operated Valve 65mm R/G with TS 300 PSI
201066	B/Fly Gear Operated Valve 80mm R/G with TS 300 PSI
201067	B/Fly Gear Operated Valve 100mm R/G with TS 300 PSI
201068	B/Fly Gear Operated Valve 125mm R/G with TS 300 PSI
201069	B/Fly Gear Operated Valve 150mm R/G with TS 300 PSI
201070	B/Fly Gear Operated Valve 200mm R/G with TS 300 PSI

Butterfly Valve Grooved Gear Operated DI (300 PSI) without Tamper Switch -UL/FM Approved

PART No	DESCRIPTION
201085	B/Fly Gear Operated Valve 50mm R/G 300 PSI
201086	B/Fly Gear Operated Valve 65mm R/G 300 PSI
201087	B/Fly Gear Operated Valve 80mm R/G 300 PSI
201088	B/Fly Gear Operated Valve 100mm R/G 300 PSI
201089	B/Fly Gear Operated Valve 125mm R/G 300 PSI
201090	B/Fly Gear Operated Valve 150mm R/G 300 PSI
201091	B/Fly Gear Operated Valve 200mm R/G 300 PSI

Butterfly Valve Grooved DI (300 PSI) Lever Operated -UL/FM Approved

PART No	DESCRIPTION
201078	B/Fly Lever Operated Valve 50mm R/G 300 PSI
201079	B/Fly Lever Operated Valve 65mm R/G 300 PSI
201080	B/Fly Lever Operated Valve 80mm R/G 300 PSI
201081	B/Fly Lever Operated Valve 100mm R/G 300 PSI
201082	B/Fly Lever Operated Valve 125mm R/G 300 PSI
201083	B/Fly Lever Operated Valve 150mm R/G 300 PSI
201084	B/Fly Lever Operated Valve 200mm R/G 300 PSI

Wafer Butterfly Valve DI (300 PSI) Gear Operated with Tamper Switch-UL/FM Approved

PART No	DESCRIPTION
201071	Wafer B/Fly Gear Operated Valve 50mm with TS 300 PSI
201072	Wafer B/Fly Gear Operated Valve 65mm with TS 300 PSI
201073	Wafer B/Fly Gear Operated Valve 80mm with TS 300 PSI
201074	Wafer B/Fly Gear Operated Valve 100mm with TS 300 PSI
201075	Wafer B/Fly Gear Operated Valve 125mm with TS 300 PSI
201076	Wafer B/Fly Gear Operated Valve 150mm with TS 300 PSI
201077	Wafer B/Fly Gear Operated Valve 200mm with TS 300 PSI

Lugged Butterfly Valve DI (300 PSI) Gear Operated with Tamper Switch-UL/FM Approved

PART No	DESCRIPTION
201092	B/Fly Gear Operated Valve Lugged 50mm with TS 300 PSI
201093	B/Fly Gear Operated Valve Lugged 65mm with TS 300 PSI
201094	B/Fly Gear Operated Valve Lugged 80mm with TS 300 PSI
201095	B/Fly Gear Operated Valve Lugged 100mm with TS 300 PSI
201096	B/Fly Gear Operated Valve Lugged 125mm with TS 300 PSI
201097	B/Fly Gear Operated Valve Lugged 150mm with TS 300 PSI
201098	B/Fly Gear Operated Valve Lugged 200mm with TS 300 PSI

Grooved Resilient Swing Check Valve DI (300 PSI)-UL/FM Approved

PART No	DESCRIPTION
201099	Swing Check Valve 50mm Grooved DI 300 PSI
201100	Swing Check Valve 65mm Grooved DI 300 PSI
201101	Swing Check Valve 80mm Grooved DI 300 PSI
201102	Swing Check Valve 100mm Grooved DI 300 PSI
201103	Swing Check Valve 125mm Grooved DI 300 PSI
201104	Swing Check Valve 150mm Grooved DI 300 PSI
201105	Swing Check Valve 200mm Grooved DI 300 PSI

Fire Australia Co Pty Ltd.
ABN No. 13165523713
47 Rushdale St. Knoxfield VIC-3180. Tel:(03) 9764 0020, Fax: (03) 9764 0023.
E-mail : sales@fireausco.com.au www.fireausco.com.au

FIRE AUSTRALIA CO

Swing Check Valve Flanged Resilient (300 PSI) -UL/FM Approved

PART No	DESCRIPTION
201106	Swing Check Valve 50mm Flanged 300 PSI
201107	Swing Check Valve 65mm Flanged 300 PSI
201108	Swing Check Valve 80mm Flanged 300 PSI
201109	Swing Check Valve 100mm Flanged 300 PSI
201110	Swing Check Valve 125mm Flanged 300 PSI
201111	Swing Check Valve 150mm Flanged 300 PSI
201112	Swing Check Valve 200mm Flanged 300 PSI

Grooved Single Detector Check Valve-Watermarked

PART No	DESCRIPTION
201113	Single Detector Check Valve 100mm Grooved Testable
201114	Single Detector Check Valve 100mm Grooved with 25mm Spacer Bypass-CWW
201115	Single Detector Check Valve 100mm Grooved with 25mm Spacer Bypass-SEW
201116	Single Detector Check Valve 100mm Grooved with 25mm Metered Bypass-YVW
201117	Single Detector Check Valve 150mm Grooved Testable
201118	Single Detector Check Valve 150mm Grooved with 25mm Spacer Bypass-CWW
201119	Single Detector Check Valve 150mm Grooved with 25mm Spacer Bypass-SEW
201120	Single Detector Check Valve 150mm Grooved with 25mm Metered Bypass-YVW

CWW :- CITY WEST WATER
SWW :- SOUTH WEST WATER
YVW :- YARRA VALLEY WATER

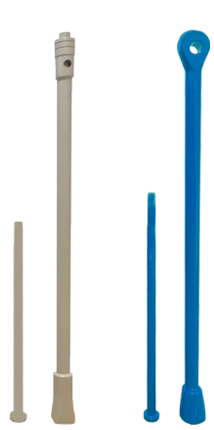

138070 138071

Underground Hydrant/Sluice Valve Key

PART No.	DESCRIPTION
138070	Medium Duty Underground Hydrant/Sluice Valve Key
138071	**Heavy Duty** Underground Hydrant/Sluice Valve Key

BOOSTER HEADS & ACCESSORIES

Boosters are Approved to AS 2419.3

WaterMark

Boosters Approval : AS 2419.3

Single Inlet Booster - Stainless Steel 80mm R/G

PART No	DESCRIPTION
133001	Single Inlet Booster SS 80mm R/G With Storz
133002	Single Inlet Booster SS 80mm R/G With CFA
133003	Single Inlet Booster SS 80mm R/G With MFB
133004	Single Inlet Booster SS 80mm R/G With QRT
133005	Single Inlet Booster SS 80mm R/G With NSW
133006	Single Inlet Booster SS 80mm R/G With SA
133007	Single Inlet Booster SS 80mm R/G With BI

WaterMark

Boosters Approval : AS 2419.3

Please Note :

The standard Dual Boosters supplied by Fire Australia Co. are rated to Class 14 & Class 21, as per AS2419.3 Class 35 Boosters are also available upon request. P.O.A.

Dual Booster Bottom Entry 100mm R/G

PART No	DESCRIPTION
133008	Bottom Entry Dual Booster SS 100mm R/G With Storz
133009	Bottom Entry Dual Booster SS 100mm R/G With CFA
133010	Bottom Entry Dual Booster SS 100mm R/G With MFB
133011	Bottom Entry Dual Booster SS 100mm R/G With QRT
133012	Bottom Entry Dual Booster SS 100mm R/G With NSW
133013	Bottom Entry Dual Booster SS 100mm R/G With SA
133014	Bottom Entry Dual Booster SS 100mm R/G With BI

WaterMark

Boosters Approval : AS 2419.3

Please Note :

The standard Dual Boosters supplied by Fire Australia Co. are rated to Class 14 & Class 21, as per AS2419.3 Class 35 Boosters are also available upon request. P.O.A.

Dual Booster Rear Entry 100mm R/G

PART No	DESCRIPTION
133015	Rear Entry Dual Booster SS 100mm R/G With Storz
133016	Rear Entry Dual Booster SS 100mm R/G With CFA
133017	Rear Entry Dual Booster SS 100mm R/G With MFB
133018	Rear Entry Dual Booster SS 100mm R/G With QRT
133019	Rear Entry Dual Booster SS 100mm R/G With NSW
133020	Rear Entry Dual Booster SS 100mm R/G With SA
133021	Rear Entry Dual Booster SS 100mm R/G With BI

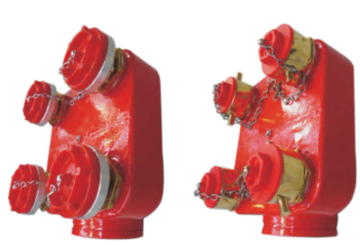

WaterMark

Boosters Approval : AS 2419.3

Quad Booster Bottom Entry 150mm R/G

PART No	DESCRIPTION
133022	Bottom Entry Quad Booster SS 150mm R/G With Storz
133023	Bottom Entry Quad Booster SS 150mm R/G With CFA
133024	Bottom Entry Quad Booster SS 150mm R/G With MFB
133025	Bottom Entry Quad Booster SS 150mm R/G With QRT
133026	Bottom Entry Quad Booster SS 150mm R/G With NSW
133027	Bottom Entry Quad Booster SS 150mm R/G With SA
133028	Bottom Entry Quad Booster SS 150mm R/G With BI

Fire Australia Co Pty Ltd.
ABN No. 13165523713
47 Rushdale St. Knoxfield VIC-3180. Tel:(03) 9764 0020, Fax: (03) 9764 0023.
E-mail : sales@fireausco.com.au www.fireausco.com.au

Bush 20mm X 8mm - Galvanized

PART No	DESCRIPTION
133040	20mm x 8mm Galvanized Bush

1/4" BSP Ball Valve

PART No	DESCRIPTION
133041	8mm Mini Ball Valve Male/Female

Roll Groove Brazing Adaptors (Copper Alloy)

PART No	DESCRIPTION
208172	Roll Groove To Copper Adaptor 50mm
208173	Roll Groove To Copper Adaptor 65mm(73OD)
208174	Roll Groove To Copper Adaptor 65mm(76OD)
208175	Roll Groove To Copper Adaptor 80mm
208176	Roll Groove To Copper Adaptor 100mm
208177	Roll Groove To Copper Adaptor 125mm
208178	Roll Groove To Copper Adaptor (165)150mm
208179	Roll Groove To Copper Adaptor (168)150mm
208180	Roll Groove To Copper Adaptor (219)200mm

65mm Pressure Gauges Liquid Filled

PART No	DESCRIPTION
133038	65mm 0-2500 kPa Pressure Gauge Liquid Filled Bottom Entry with 1/4" BSP(M) Inlet
133039	65mm 0-2500 kPa Pressure Gauge Liquid Filled Rear Entry with 1/4" BSP(M) Inlet

HYDRANT VALVES & ACCESSORIES

Hydrant Valves are Approved to AS 2419.2 & AS/NZS 4020 Standards

Approval : AS 2419.2 & AS/NZS 4020 Standards

WaterMark

Hydrant Valve / Landing Valve / Millcock Oblique - Stainless Steel

PART No	DESCRIPTION
137001	Hydrant Valve S/Steel 80mm R/G & 65mm BSP Female inlet Oblique with Plastic Cap **CFA** Outlet
137002	Hydrant Valve S/Steel 80mm R/G & 65mm BSP Female inlet Oblique with Plastic Cap **MFB** Outlet
137004	Hydrant Valve S/Steel 80mm R/G & 65mm BSP Female inlet Oblique with Plastic Cap **Storz** Outlet with Plastic Cap **Storz Aluminium Forged adaptor is : NEN 3374 approved**
137005	Hydrant Valve S/Steel 65mm BSP Male inlet Oblique **CFA** Outlet with Plastic Cap
137006	Hydrant Valve S/Steel 65mm BSP Male inlet Oblique **MFB** Outlet with Plastic Cap
137008	Hydrant Valve S/Steel 65mm BSP Male inlet Oblique **Storz** Outlet with Plastic Cap **Storz Aluminium Forged adaptor is : NEN 3374 approved**

Approval : AS 2419.2 & AS/NZS 4020 Standards

WaterMark

Hydrant Valve / Landing Valve / Millcock Right Angled Grooved - Stainless Steel

PART No	DESCRIPTION
137009	Hydrant Valve S/Steel 80mm R/G & 65mm BSP Female inlet Right Angled with Plastic Cap **NSW FBT** Outlet
137010	Hydrant Valve S/Steel 80mm R/G & 65mm BSP Female inlet Right Angled with Plastic Cap **QRT** Outlet
137012	Hydrant Valve S/Steel 80mm R/G & 65mm BSP Female inlet Right Angled with Plastic Cap **SA** Outlet
137013	Hydrant Valve S/Steel 80mm R/G & 65mm BSP Female inlet Right Angled with Plastic Cap **Storz** Outlet **Storz Aluminium Forged adaptor is : NEN 3374 approved**
137014	Hydrant Valve S/Steel 80mm R/G & 65mm BSP Female inlet Right Angled with Plastic Plug **BI** Outlet

Approval : AS 2419.2 & AS/NZS 4020 Standards

WaterMark

Fire Australia Co Pty Ltd.
ABN No. 13165523713
47 Rushdale St. Knoxfield VIC-3180. Tel:(03) 9764 0020, Fax: (03) 9764 0023.
E-mail : sales@fireausco.com.au www.fireausco.com.au

Hydrant Valves are Approved to AS 2419.2 & AS/NZS 4020 Standards

Hydrant Valve / Landing Valve / Millcock Right Angled BSP Male - Stainless Steel

Approval : AS 2419.2 & AS/NZS 4020 Standards

WaterMark

PART No	DESCRIPTION
137015	Hydrant Valve S/Steel 65mm BSP Male inlet Right Angled with Plastic Cap **NSW FBT** Outlet
137016	Hydrant Valve S/Steel 65mm BSP Male inlet Right Angled with Plastic Cap **QRT** Outlet
137018	Hydrant Valve S/Steel 65mm BSP Male inlet Right Angled with Plastic Cap **SA** Outlet with Plastic Cap
137019	Hydrant Valve S/Steel 65mm BSP Male inlet Right Angled **Storz** Outlet with Plastic Cap **Storz Aluminium Forged adaptor is : NEN 3374 approved**
137020	Hydrant Valve S/Steel 65mm BSP Male inlet Right Angled **BI** Outlet with Plastic Plug

Hydrant Valve / Landing Valve / Millcock Oblique - Copper Alloy / Brass

Approval : AS 2419.2 & AS/NZS 4020 Standards

WaterMark

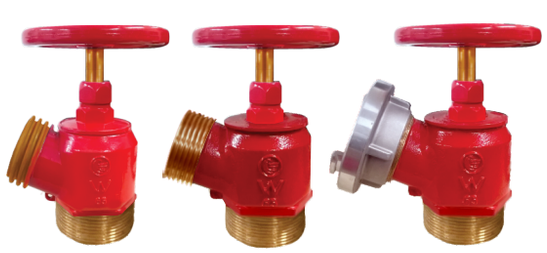

Approval : AS 2419.2 & AS/NZS 4020 Standards

WaterMark

PART No	DESCRIPTION
137021	Hydrant Valve Copper Alloy / Brass 80mm R/G & 65mm BSP Female inlet Oblique with Plastic Cap **CFA** Outlet
137022	Hydrant Valve Copper Alloy / Brass 80mm R/G & 65mm BSP Female inlet Oblique with Plastic Cap **MFB** Outlet
137024	Hydrant Valve Copper Alloy / Brass 80mm R/G & 65mm BSP Female inlet Oblique with Plastic Cap **Storz** Outlet with Plastic Cap **Storz Aluminium Forged adaptor is : NEN 3374 approved**
137025	Hydrant Valve Copper Alloy / Brass 65mm BSP Male inlet Oblique **CFA** Outlet with Plastic Cap
137026	Hydrant Valve Copper Alloy / Brass 65mm BSP Male inlet Oblique **MFB** Outlet with Plastic Cap
137028	Hydrant Valve Copper Alloy / Brass 65mm BSP Male inlet Oblique **Storz** Outlet with Plastic Cap **Storz Aluminium Forged adaptor is : NEN 3374 approved**

HYDRANT VALVES & ACCESSORIES

Hydrant Valves are Approved to AS 2419.2 & AS/NZS 4020 Standards

Approval : AS 2419.2 & AS/NZS 4020 Standards

WaterMark

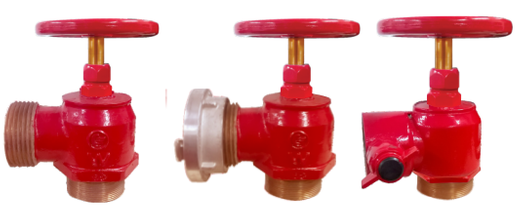

Approval : AS 2419.2 & AS/NZS 4020 Standards

WaterMark

Hydrant Valve / Landing Valve / Millcock
Right Angled - Copper Alloy / Brass

PART No	DESCRIPTION
137029	Hydrant Valve Copper Alloy / Brass 80mm R/G & 65mm BSP Female inlet Right Angled with Plastic Cap **NSW FBT** Outlet
137030	Hydrant Valve Copper Alloy / Brass 80mm R/G & 65mm BSP Female inlet Right Angled with Plastic Cap **QRT** Outlet
137032	Hydrant Valve Copper Alloy / Brass 80mm R/G & 65mm BSP Female inlet Right Angled with Plastic Cap **SA** Outlet
137033	Hydrant Valve Copper Alloy / Brass 80mm R/G & 65mm BSP Female inlet Right Angled with Plastic Cap **Storz** Outlet **Storz Aluminium Forged adaptor is : NEN 3374 approved**
137034	Hydrant Valve Copper Alloy / Brass 80mm R/G & 65mm BSP Female inlet Right Angled with Plastic Plug **BI** Outlet
137035	Hydrant Valve Copper Alloy / Brass 65mm BSP Male inlet Right Angled with Plastic Cap **NSW** Outlet
137036	Hydrant Valve Copper Alloy / Brass 65mm BSP Male inlet Right Angled with Plastic Cap **QRT** Outlet
137038	Hydrant Valve Copper Alloy / Brass 65mm BSP Male inlet Right Angled with Plastic Cap **SA** Outlet with Plastic Cap
137039	Hydrant Valve Copper Alloy / Brass 65mm BSP Male inlet Right Angled **Storz** Outlet with Plastic Cap **Storz Aluminium Forged adaptor is : NEN 3374 approved**
137040	Hydrant Valve Copper Alloy / Brass 65mm BSP Male inlet Right Angled **BI** Outlet with Plastic Plug

Ned Kelly Valve Cover - Metallic

PART No	DESCRIPTION
137041	Valve Cover Ned Kelly Metallic

Padlock With Key - 003

PART No	DESCRIPTION
137042	003 Padlock with Key

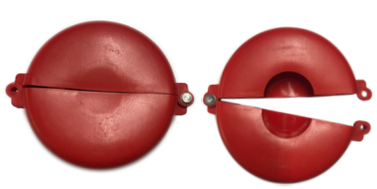

Hydrant Wheel Valve Lock - Plastic

PART No	DESCRIPTION
137043	Hydrant Valve Cover Lockout Device Plastic

*LOCK NOT INCLUDED

New

Vandal Resistant

Hydrant Wheel Valve Lock - Aluminium

PART No	DESCRIPTION
137048	Hydrant Valve Cover Lockout Device **Aluminium**

*LOCK NOT INCLUDED

Hydrant Wheel - Aluminium (Pressure Die Cast)

PART No	DESCRIPTION
137044	Hydrant Valve Hand Wheel

Fire Australia Co Pty Ltd.
ABN No. 13165523713
47 Rushdale St. Knoxfield VIC-3180. Tel:(03) 9764 0020, Fax: (03) 9764 0023.
E-mail : sales@fireausco.com.au www.fireausco.com.au

FIRE AUSTRALIA CO

Cast Iron OS & Y Table E Flanged Gate Valves

PART No	DESCRIPTION
201121	Gate Valve Cast Iron OS&Y 50mm CLASS 125 Table E Flanged
201122	Gate Valve Cast Iron OS&Y 650mm` CLASS 125 Table E Flanged
201123	Gate Valve Cast Iron OS&Y 80mm CLASS 125 Table E Flanged
201124	Gate Valve Cast Iron OS&Y 100mm CLASS 125 Table E Flanged
201125	Gate Valve Cast Iron OS&Y 125mm CLASS 125 Table E Flanged
201126	Gate Valve Cast Iron OS&Y 150mm CLASS 125 Table E Flanged
201127	Gate Valve Cast Iron OS&Y 200mm CLASS 125 Table E Flanged
201128	Gate Valve Cast Iron OS&Y 250mm CLASS 125 Table E Flanged
201129	Gate Valve Cast Iron OS&Y 300mm CLASS 125 Table E Flanged

Cast Iron NRS Table E Flanged Gate Valves

PART No	DESCRIPTION
201130	Gate Valve Cast Iron Non Rising Stem 50mm CLASS 125 Table E Flanged
201131	Gate Valve Cast Iron Non Rising Stem 65mm CLASS 125 Table E Flanged
201132	Gate Valve Cast Iron Non Rising Stem 80mm CLASS 125 Table E Flanged
201133	Gate Valve Cast Iron Non Rising Stem 100mm CLASS 125 Table E Flanged
201134	Gate Valve Cast Iron Non Rising Stem 125mm CLASS 125 Table E Flanged
201135	Gate Valve Cast Iron Non Rising Stem 150mm CLASS 125 Table E Flanged
201136	Gate Valve Cast Iron Non Rising Stem 200mm CLASS 125 Table E Flanged
201137	Gate Valve Cast Iron Non Rising Stem 250mm CLASS 125 Table E Flanged
201138	Gate Valve Cast Iron Non Rising Stem 300mm CLASS 125 Table E Flanged

Cast Iron Table E Flanged Swing Check Valves

PART No	DESCRIPTION
201139	Swing Check Valve Cast Iron 50mm Table E Flanged Bronze Seat
201140	Swing Check Valve Cast Iron 65mm Table E Flanged Bronze Seat
201141	Swing Check Valve Cast Iron 80mm Table E Flanged Bronze Seat
201142	Swing Check Valve Cast Iron 100mm Table E Flanged Bronze Seat
201143	Swing Check Valve Cast Iron 125mm Table E Flanged Bronze Seat
201144	Swing Check Valve Cast Iron 150mm Table E Flanged Bronze Seat
201145	Swing Check Valve Cast Iron 200mm Table E Flanged Bronze Seat
201146	Swing Check Valve Cast Iron 250mm Table E Flanged Bronze Seat
201147	Swing Check Valve Cast Iron 300mm Table E Flanged Bronze Seat

Cast Iron Table E Flanged Y Strainer

PART No	DESCRIPTION
201148	Y Strainer Cast Iron 50mm Table E Flanged
201149	Y Strainer Cast Iron 65mm Table E Flanged
201150	Y Strainer Cast Iron 80mm Table E Flanged
201151	Y Strainer Cast Iron 100mm Table E Flanged
201152	Y Strainer Cast Iron 125mm Table E Flanged
201153	Y Strainer Cast Iron 150mm Table E Flanged
201154	Y Strainer Cast Iron 200mm Table E Flanged
201155	Y Strainer Cast Iron 250mm Table E Flanged
201156	Y Strainer Cast Iron 300mm Table E Flanged

Wafer Duo Check Valve With EPDM Seat & S/S Disc

PART No	DESCRIPTION
210140	Wafer Duo Check Valve Cast Iron 50mm With EPDM Seat & SS Disc
210141	Wafer Duo Check Valve Cast Iron 65mm With EPDM Seat & SS Disc
210142	Wafer Duo Check Valve Cast Iron 80mm With EPDM Seat & SS Disc
210143	Wafer Duo Check Valve Cast Iron 100mm With EPDM Seat & SS Disc
210144	Wafer Duo Check Valve Cast Iron 125mm With EPDM Seat & SS Disc
210145	Wafer Duo Check Valve Cast Iron 150mm With EPDM Seat & SS Disc
210146	Wafer Duo Check Valve Cast Iron 200mm With EPDM Seat & SS Disc
210147	Wafer Duo Check Valve Cast Iron 250mm With EPDM Seat & SS Disc
210148	Wafer Duo Check Valve Cast Iron 300mm With EPDM Seat & SS Disc

Wafer Butterfly Valve With EPDM Seat & S/S Disc

PART No	DESCRIPTION
210149	Wafer Butterfly Valve Cast Iron 50mm With EPDM Seat & SS Disc
210150	Wafer Butterfly Valve Cast Iron 65mm With EPDM Seat & SS Disc
210151	Wafer Butterfly Valve Cast Iron 80mm With EPDM Seat & SS Disc
210152	Wafer Butterfly Valve Cast Iron 100mm With EPDM Seat & SS Disc
210153	Wafer Butterfly Valve Cast Iron 125mm With EPDM Seat & SS Disc
210154	Wafer Butterfly Valve Cast Iron 150mm With EPDM Seat & SS Disc
210155	Wafer Butterfly Valve Cast Iron 200mm With EPDM Seat & SS Disc
210156	Wafer Butterfly Valve Cast Iron 250mm With EPDM Seat & SS Disc
210157	Wafer Butterfly Valve Cast Iron 300mm With EPDM Seat & SS Disc

Lugged Table E Butterfly Valve With EPDM Seat & S/S Disc

PART No	DESCRIPTION
210158	Lugged Butterfly Valve Cast Iron 50mm Table E With EPDM Seat & SS Disc
210159	Lugged Butterfly Valve Cast Iron 65mm Table E With EPDM Seat & SS Disc
210160	Lugged Butterfly Valve Cast Iron 80mm Table E With EPDM Seat & SS Disc
210161	Lugged Butterfly Valve Cast Iron 100mm Table E With EPDM Seat & SS Disc
210162	Lugged Butterfly Valve Cast Iron 125mm Table E With EPDM Seat & SS Disc
210163	Lugged Butterfly Valve Cast Iron 150mm Table E With EPDM Seat & SS Disc
210164	Lugged Butterfly Valve Cast Iron 200mm Table E With EPDM Seat & SS Disc
210165	Lugged Butterfly Valve Cast Iron 250mm Table E With EPDM Seat & SS Disc
210166	Lugged Butterfly Valve Cast Iron 300mm Table E With EPDM Seat & SS Disc

Fire Australia Co Pty Ltd.
ABN No. 13165523713
47 Rushdale St. Knoxfield VIC-3180. Tel:(03) 9764 0020, Fax: (03) 9764 0023.
E-mail : sales@fireausco.com.au www.fireausco.com.au

FIRE AUSTRALIA CO

General Industry Brass BSP
Female X Female Gate Valves With Hand Wheel

PART No	DESCRIPTION
210001	General Industry Gate Valve Brass 15mm BSP Female X Female
210002	General Industry Gate Valve Brass 20mm BSP Female X Female
210003	General Industry Gate Valve Brass 25mm BSP Female X Female
210004	General Industry Gate Valve Brass 32mm BSP Female X Female
210005	General Industry Gate Valve Brass 40mm BSP Female X Female
210006	General Industry Gate Valve Brass 50mm BSP Female X Female
210007	General Industry Gate Valve Brass 65mm BSP Female X Female
210008	General Industry Gate Valve Brass 80mm BSP Female X Female
210009	General Industry Gate Valve Brass 100mm BSP Female X Female

DR Brass Approved BSP
Female X Female Gate Valves-AS1628 With Hand Wheel

WaterMark

PART No	DESCRIPTION
210010	Gate Valve DR Brass Approved 15mm BSP Female X Female
210011	Gate Valve DR Brass Approved 20mm BSP Female X Female
210012	Gate Valve DR Brass Approved 25mm BSP Female X Female
210013	Gate Valve DR Brass Approved 30mm BSP Female X Female
210014	Gate Valve DR Brass Approved 40mm BSP Female X Female
210015	Gate Valve DR Brass Approved 50mm BSP Female X Female
210016	Gate Valve DR Brass Approved 65mm BSP Female X Female
210017	Gate Valve DR Brass Approved 80mm BSP Female X Female
210018	Gate Valve DR Brass Approved 100mm BSP Female X Female

General Industry Brass BSP Female X Female Ball Valves

PART No	DESCRIPTION
210019	General Industry Ball Valve Brass 6mm(1/4) BSP Female X Female
210020	General Industry Ball Valve Brass 10mm BSP Female X Female
210021	General Industry Ball Valve Brass 15mm BSP Female X Female
210022	General Industry Ball Valve Brass 20mm BSP Female X Female
210023	General Industry Ball Valve Brass 25mm BSP Female X Female
210024	General Industry Ball Valve Brass 32mm BSP Female X Female
210025	General Industry Ball Valve Brass 40mm BSP Female X Female
210026	General Industry Ball Valve Brass 50mm BSP Female X Female
210027	General Industry Ball Valve Brass 60mm BSP Female X Female
210028	General Industry Ball Valve Brass 80mm BSP Female X Female
210029	General Industry Ball Valve Brass 100mm BSP Female X Female

General Industry Brass BSP Female X Female Ball Valve With Lockable Lever

PART No	DESCRIPTION
210030	General Industry Ball Valve C/W Lockable Lever Brass 15mm BSP Female X Female
210031	General Industry Ball Valve C/W Lockable Lever Brass 20mm BSP Female X Female
210032	General Industry Ball Valve C/W Lockable Lever Brass 25mm BSP Female X Female
210033	General Industry Ball Valve C/W Lockable Lever Brass 32mm BSP Female X Female
210034	General Industry Ball Valve C/W Lockable Lever Brass 40mm BSP Female X Female
210035	General Industry Ball Valve C/W Lockable Lever Brass 50mm BSP Female X Female
210036	General Industry Ball Valve C/W Lockable Lever Brass 65mm BSP Female X Female
210037	General Industry Ball Valve C/W Lockable Lever Brass 80mm BSP Female X Female
210038	General Industry Ball Valve C/W Lockable Lever Brass 100mm BSP Female X Female

General Industry Brass BSP Male X Female Ball Valves

PART No	DESCRIPTION
210039	General Industry Ball Valve Brass 6mm (1/4) BSP Male X Female
210040	General Industry Ball Valve Brass 10mm (1/4) BSP Male X Female
210041	General Industry Ball Valve Brass 15mm (1/4) BSP Male X Female
210042	General Industry Ball Valve Brass 20mm (1/4) BSP Male X Female
210043	General Industry Ball Valve Brass 25mm (1/4) BSP Male X Female
210044	General Industry Ball Valve Brass 32mm (1/4) BSP Male X Female
210046	General Industry Ball Valve Brass 50mm (1/4) BSP Male X Female

Brass BSP Female X Female Mini Ball Valve

PART No	DESCRIPTION
210076	Mini Ball Valve Brass 6mm (1/4) BSP Female X Female
210077	Mini Ball Valve Brass 10mm (1/4) BSP Female X Female
210078	Mini Ball Valve Brass 15mm (1/4) BSP Female X Female

Brass BSP Male X Female Mini Ball Valve

PART No	DESCRIPTION
210079	Mini Ball Valve Brass 6mm (1/4) BSP Male X Female
210080	Mini Ball Valve Brass 10mm (1/4) BSP Male X Female
210081	Mini Ball Valve Brass 15mm (1/4) BSP Male X Female

Brass Hose Bibcock

PART No	DESCRIPTION
210177	Hose Bibcock Brass 15mm
210178	Hose Bibcock Brass 20mm

Fire Australia Co Pty Ltd.
ABN No. 13165523713
47 Rushdale St. Knoxfield VIC-3180. Tel:(03) 9764 0020, Fax: (03) 9764 0023.
E-mail : sales@fireausco.com.au www.fireausco.com.au

FIRE AUSTRALIA CO

DR Brass Female X Female Dual Approved Watermark & AGA Ball Valve

PART No	DESCRIPTION
210047	Ball Valve Dual Approved Watermark & AGA Brass 6mm(1/4) BSP Female X Female
210048	Ball Valve Dual Approved Watermark & AGA Brass 10mm BSP Female X Female
210049	Ball Valve Dual Approved Watermark & AGA Brass 20mm BSP Female X Female
210050	Ball Valve Dual Approved Watermark & AGA Brass 25mm BSP Female X Female
210051	Ball Valve Dual Approved Watermark & AGA Brass 32mm BSP Female X Female
210052	Ball Valve Dual Approved Watermark & AGA Brass 40mm BSP Female X Female
210053	Ball Valve Dual Approved Watermark & AGA Brass 50mm BSP Female X Female
210054	Ball Valve Dual Approved Watermark & AGA Brass 65mm BSP Female X Female
210055	Ball Valve Dual Approved Watermark & AGA Brass 80mm BSP Female X Female
210056	Ball Valve Dual Approved Watermark & AGA Brass 100mm BSP Female X Female

DR Brass F/F Dual Approved W/mark & AGA Ball Valve C/W Lockable Lever

PART No	DESCRIPTION
210057	Ball Valve C/W Lockable Lever Dual Approved Watermark & AGA Brass 15mm BSP F/F
210058	Ball Valve C/W Lockable Lever Dual Approved Watermark & AGA Brass 20mm BSP F/F
210059	Ball Valve C/W Lockable Lever Dual Approved Watermark & AGA Brass 25mm BSP F/F
210060	Ball Valve C/W Lockable Lever Dual Approved Watermark & AGA Brass 32mm BSP F/F
210061	Ball Valve C/W Lockable Lever Dual Approved Watermark & AGA Brass 40mm BSP F/F
210062	Ball Valve C/W Lockable Lever Dual Approved Watermark & AGA Brass 50mm BSP F/F

DR Brass F/F Dual Approved W/mark & AGA "T" Handle Ball Valve

PART No	DESCRIPTION
210063	Ball Valve "T" Handle Dual Approved Watermark & AGA Brass 15mm BSP F/F
210064	Ball Valve "T" Handle Dual Approved Watermark & AGA Brass 20mm BSP F/F
210065	Ball Valve "T" Handle Dual Approved Watermark & AGA Brass 25mm BSP F/F

DR Brass M/F Dual Approved W/mark & AGA "T" Handle Ball Valve

PART No	DESCRIPTION
210066	Ball Valve "T" Handle Dual Approved Watermark & AGA Brass 15mm BSP M/F
210067	Ball Valve "T" Handle Dual Approved Watermark & AGA Brass 20mm BSP M/F
210068	Ball Valve "T" Handle Dual Approved Watermark & AGA Brass 25mm BSP M/F

Brass 3 Way Ball Valve - L Port BSP

PART No	DESCRIPTION
210069	3 Way Ball Valve - L Port Brass 10mm BSP
210070	3 Way Ball Valve - L Port Brass 15mm BSP
210071	3 Way Ball Valve - L Port Brass 20mm BSP
210072	3 Way Ball Valve - L Port Brass 25mm BSP
210073	3 Way Ball Valve - L Port Brass 32mm BSP
210074	3 Way Ball Valve - L Port Brass 40mm BSP
210075	3 Way Ball Valve - L Port Brass 50mm BSP

Europa Brass Spring Check Valve

PART No	DESCRIPTION
210104	Spring Check Valve Brass Europa 15mm BSP
210105	Spring Check Valve Brass Europa 20mm BSP
210106	Spring Check Valve Brass Europa 25mm BSP
210107	Spring Check Valve Brass Europa 32mm BSP
210108	Spring Check Valve Brass Europa 40mm BSP
210109	Spring Check Valve Brass Europa 50mm BSP
210110	Spring Check Valve Brass Europa 65mm BSP
210111	Spring Check Valve Brass Europa 80mm BSP
210112	Spring Check Valve Brass Europa 100mm BSP

Swing Check Valve -Brass

PART No	DESCRIPTION
210113	Swing Check Valve 15mm
210114	Swing Check Valve 20mm
210115	Swing Check Valve 25mm
210116	Swing Check Valve 32mm
210117	Swing Check Valve 40mm
210118	Swing Check Valve 50mm
210119	Swing Check Valve 65mm
210120	Swing Check Valve 80mm
210121	Swing Check Valve 100mm

Brass Foot Valve

PART No	DESCRIPTION
210131	Foot Valve Brass 15mm BSP Female
210132	Foot Valve Brass 20mm BSP Female
210133	Foot Valve Brass 25mm BSP Female
210134	Foot Valve Brass 32mm BSP Female
210135	Foot Valve Brass 40mm BSP Female
210136	Foot Valve Brass 50mm BSP Female
210137	Foot Valve Brass 65mm BSP Female
210138	Foot Valve Brass 80mm BSP Female
210139	Foot Valve Brass 100mm BSP Female

Y Strainer - BSP General Industry

PART No	DESCRIPTION
210213	Y Strainer Brass 15mm BSP
210214	Y Strainer Brass 20mm BSP
210215	Y Strainer Brass 25mm BSP
210216	Y Strainer Brass 32mm BSP
210217	Y Strainer Brass 40mm BSP
210218	Y Strainer Brass 50mm BSP

Fire Australia Co Pty Ltd.
ABN No. 13165523713
47 Rushdale St. Knoxfield VIC-3180. Tel:(03) 9764 0020, Fax: (03) 9764 0023.
E-mail : sales@fireausco.com.au www.fireausco.com.au

FIRE AUSTRALIA CO

Stainless Steel 316 - 2 Piece Ball Valve

PART No	DESCRIPTION
210082	Ball Valve - 2 Piece SS 316 6mm(1/4) BSP F/F
210083	Ball Valve - 2 Piece SS 316 10mm BSP F/F
210084	Ball Valve - 2 Piece SS 316 15mm BSP F/F
210085	Ball Valve - 2 Piece SS 316 20mm BSP F/F
210086	Ball Valve - 2 Piece SS 316 25mm BSP F/F
210087	Ball Valve - 2 Piece SS 316 32mm BSP F/F
210088	Ball Valve - 2 Piece SS 316 40mm BSP F/F
210089	Ball Valve - 2 Piece SS 316 50mm BSP F/F
210090	Ball Valve - 2 Piece SS 316 65mm BSP F/F
210091	Ball Valve - 2 Piece SS 316 80mm BSP F/F
210092	Ball Valve - 2 Piece SS 316 100mm BSP F/F

Stainless Steel 316-3 Piece Ball Valves

PART No	DESCRIPTION
210093	Ball Valve - 3 Piece SS 316 6mm(1/4) BSP F/F
210094	Ball Valve - 3 Piece SS 316 10mm BSP F/F
210095	Ball Valve - 3 Piece SS 316 15mm BSP F/F
210096	Ball Valve - 3 Piece SS 316 20mm BSP F/F
210097	Ball Valve - 3 Piece SS 316 25mm BSP F/F
210098	Ball Valve - 3 Piece SS 316 32mm BSP F/F
210099	Ball Valve - 3 Piece SS 316 40mm BSP F/F
210100	Ball Valve - 3 Piece SS 316 50mm BSP F/F
210101	Ball Valve - 3 Piece SS 316 65mm BSP F/F
210102	Ball Valve - 3 Piece SS 316 80mm BSP F/F
210103	Ball Valve - 3 Piece SS 316 100mm BSP F/F

Stainless Steel 316 - 3 Piece Check Valve-BSP (6800 kPa Cold Working Pressure)

PART No	DESCRIPTION
210179	Check Valve - 3 Piece SS 316 15mm BSP F/F
210180	Check Valve - 3 Piece SS 316 20mm BSP F/F
210181	Check Valve - 3 Piece SS 316 25mm BSP F/F
210182	Check Valve - 3 Piece SS 316 32mm BSP F/F
210183	Check Valve - 3 Piece SS 316 40mm BSP F/F
210184	Check Valve - 3 Piece SS 316 50mm BSP F/F

Stainless Steel 316 - Swing Check Valve-BSP (1400 kPa Cold Working Pressure)

PART No	DESCRIPTION
210185	Swing Check Valve SS 316 15mm BSP F/F
210186	Swing Check Valve SS 316 20mm BSP F/F
210187	Swing Check Valve SS 316 25mm BSP F/F
210188	Swing Check Valve SS 316 32mm BSP F/F
210189	Swing Check Valve SS 316 40mm BSP F/F
210190	Swing Check Valve SS 316 50mm BSP F/F

Stainless Steel 316 - Y Strainer-BSP (5500 kPa Cold Working Pressure)

PART No	DESCRIPTION
210191	Y Strainer SS 316 15mm BSP F/F
210192	Y Strainer SS 316 20mm BSP F/F
210193	Y Strainer SS 316 25mm BSP F/F
210194	Y Strainer SS 316 32mm BSP F/F
210195	Y Strainer SS 316 40mm BSP F/F
210196	Y Strainer SS 316 50mm BSP F/F

Fire Australia Co Pty Ltd.
ABN No. 13165523713
47 Rushdale St. Knoxfield VIC-3180. Tel:(03) 9764 0020, Fax: (03) 9764 0023.
E-mail : sales@fireausco.com.au www.fireausco.com.au

FIRE AUSTRALIA CO

Stainless Steel 316 - 3 Way Ball Valve - L Port BSP

PART No	DESCRIPTION
210197	3 Way Ball Valve - L Port SS 316 6mm(1/4) BSP F/F
210198	3 Way Ball Valve - L Port SS 316 10mm BSP F/F
210199	3 Way Ball Valve - L Port SS 316 15mm BSP F/F
210200	3 Way Ball Valve - L Port SS 316 20mm BSP F/F
210201	3 Way Ball Valve - L Port SS 316 25mm BSP F/F
210202	3 Way Ball Valve - L Port SS 316 32mm BSP F/F
210203	3 Way Ball Valve - L Port SS 316 40mm BSP F/F
210204	3 Way Ball Valve - L Port SS 316 50mm BSP F/F

Stainless Steel 316 - 3 Way Ball Valve - T Port BSP

PART No	DESCRIPTION
210205	3 Way Ball Valve - T Port SS 316 6mm(1/4) BSP F/F
210206	3 Way Ball Valve - T Port SS 316 10mm BSP F/F
210207	3 Way Ball Valve - T Port SS 316 15mm BSP F/F
210208	3 Way Ball Valve - T Port SS 316 20mm BSP F/F
210209	3 Way Ball Valve - T Port SS 316 25mm BSP F/F
210210	3 Way Ball Valve - T Port SS 316 32mm BSP F/F
210211	3 Way Ball Valve - T Port SS 316 40mm BSP F/F
210212	3 Way Ball Valve - T Port SS 316 50mm BSP F/F

Stainless Steel Filter For Use With Spring Check Valve

PART No	DESCRIPTION
210122	Filter For Spring Check Valve SS 15mm BSP Male
210123	Filter For Spring Check Valve SS 20mm BSP Male
210124	Filter For Spring Check Valve SS 25mm BSP Male
210125	Filter For Spring Check Valve SS 32mm BSP Male
210126	Filter For Spring Check Valve SS 40mm BSP Male
210127	Filter For Spring Check Valve SS 50mm BSP Male
210128	Filter For Spring Check Valve SS 65mm BSP Male
210129	Filter For Spring Check Valve SS 80mm BSP Male
210130	Filter For Spring Check Valve SS 100mm BSP Male

Fire Australia Co Pty Ltd.
ABN No. 13165523713
47 Rushdale St. Knoxfield VIC-3180. Tel:(03) 9764 0020, Fax: (03) 9764 0023.
E-mail : sales@fireausco.com.au www.fireausco.com.au

Stainless Steel 316 Knife Gate Valve - Metal Seat Table D

PART No	DESCRIPTION
201157	Knife Gate Valve Metal Seat S/S 316 100mm Table D
201158	Knife Gate Valve Metal Seat S/S 316 150mm Table D
201159	Knife Gate Valve Metal Seat S/S 316 200mm Table D
201160	Knife Gate Valve Metal Seat S/S 316 250mm Table D
201161	Knife Gate Valve Metal Seat S/S 316 300mm Table D

Stainless Steel 316 Knife Gate Valve - Metal Seat Table E

PART No	DESCRIPTION
201162	Knife Gate Valve Metal Seat S/S 316 50mm Table E
201163	Knife Gate Valve Metal Seat S/S 316 65mm Table E
201164	Knife Gate Valve Metal Seat S/S 316 80mm Table E
201165	Knife Gate Valve Metal Seat S/S 316 100mm Table E
201166	Knife Gate Valve Metal Seat S/S 316 150mm Table E
201167	Knife Gate Valve Metal Seat S/S 316 200mm Table E
201168	Knife Gate Valve Metal Seat S/S 316 250mm Table E
201169	Knife Gate Valve Metal Seat S/S 316 300mm Table E

Stainless Steel 316 Knife Gate Valve - Epdm Seat Table D

PART No	DESCRIPTION
201170	Knife Gate Valve EPDM Seat S/S 316 100mm Table E
201171	Knife Gate Valve EPDM Seat S/S 316 150mm Table E
201172	Knife Gate Valve EPDM Seat S/S 316 200mm Table E
201173	Knife Gate Valve EPDM Seat S/S 316 250mm Table E
201174	Knife Gate Valve EPDM Seat S/S 316 300mm Table E

Stainless Steel 316 Knife Gate Valve - Epdm Seat Table E

PART No	DESCRIPTION
201175	Knife Gate Valve Resilient Seat S/S 316 50mm Table E
201176	Knife Gate Valve Resilient Seat S/S 316 65mm Table E
201177	Knife Gate Valve Resilient Seat S/S 316 80mm Table E
201178	Knife Gate Valve Resilient Seat S/S 316 100mm Table E
201179	Knife Gate Valve Resilient Seat S/S 316 150mm Table E
201180	Knife Gate Valve Resilient Seat S/S 316 200mm Table E
201181	Knife Gate Valve Resilient Seat S/S 316 250mm Table E
201182	Knife Gate Valve Resilient Seat S/S 316 300mm Table E

Fire Australia Co Pty Ltd.
ABN No. 13165523713
47 Rushdale St. Knoxfield VIC-3180. Tel:(03) 9764 0020, Fax: (03) 9764 0023.
E-mail : sales@fireausco.com.au www.fireausco.com.au

FIRE AUSTRALIA CO

PVC Ball Valve - BSP Threaded Ends

PART No	DESCRIPTION
210219	PVC Ball Valve Screwed 15mm BSP F/F
210220	PVC Ball Valve Screwed 20mm BSP F/F
210221	PVC Ball Valve Screwed 25mm BSP F/F
210222	PVC Ball Valve Screwed 32mm BSP F/F
210223	PVC Ball Valve Screwed 40mm BSP F/F
210224	PVC Ball Valve Screwed 50mm BSP F/F
210225	PVC Ball Valve Screwed 65mm BSP F/F
210226	PVC Ball Valve Screwed 80mm BSP F/F
210227	PVC Ball Valve Screwed 100mm BSP F/F

PVC Ball Valve - Solvent Weld Ends

PART No	DESCRIPTION
210228	PVC Ball Valve Solvent Weld 15mm
210229	PVC Ball Valve Solvent Weld 20mm
210230	PVC Ball Valve Solvent Weld 25mm
210231	PVC Ball Valve Solvent Weld 32mm
210232	PVC Ball Valve Solvent Weld 40mm
210233	PVC Ball Valve Solvent Weld 50mm
210234	PVC Ball Valve Solvent Weld 65mm
210235	PVC Ball Valve Solvent Weld 80mm
210236	PVC Ball Valve Solvent Weld 100mm

Brook Bronze Globe Valve - B501

PART No	DESCRIPTION
201185	Globe Valve Bronze 15mm BSP F/F
201186	Globe Valve Bronze 20mm BSP F/F
201187	Globe Valve Bronze 25mm BSP F/F
201188	Globe Valve Bronze 32mm BSP F/F
201189	Globe Valve Bronze 40mm BSP F/F
201190	Globe Valve Bronze 50mm BSP F/F

(UNION BONNET TYPE C/W GRUB SCREW 410 S/S TRIM - 2100 kPa @ 225 Deg C - BSPT ENDS 300 PSI)

Brook Bronze Lift (piston) Check Valve - B521

PART No	DESCRIPTION
201191	Lift Check Valve Bronze 15mm BSP F/F
201192	Lift Check Valve Bronze 20mm BSP F/F
201193	Lift Check Valve Bronze 25mm BSP F/F
201194	Lift Check Valve Bronze 32mm BSP F/F
201195	Lift Check Valve Bronze 40mm BSP F/F
201196	Lift Check Valve Bronze 50mm BSP F/F

(UNION COVER 410 S/S TRIM - 2100 kPa @ 225 Deg C - BSPT ENDS 300 PSI)

PIPE & PIPE FITTINGS

- BLACK STEEL FITTINGS 95 - 102
- BRASS BSP SCREWED FITTINGS 122 - 125
- BSM FITTINGS 116 - 119
- CARBON STEEL BUTT WELD FITTINGS 126 - 137
- CARBON STEEL HIGH PRESSURE FITTINGS 142 - 154
- FABRICATED FITTINGS 86
- FLANGES & GASKETS 155 - 174
- FOOT VALVES 85
- GALVANIZED FLANGE FITTINGS 80 - 84
- GALVANIZED MALLEABLE IRON FITTINGS 87 - 94
- GAL STEEL FITTINGS 103 - 107
- HYDRANT RISERS 51 - 55
- PIPES 65 - 67
- PIPE & TUBE CLAMPS 68 - 69
- R/G DUCTILE IRON PIPE FITTINGS 70 - 75
- R/G STAINLESS STEEL PIPE FITTINGS 76 - 79
- STAINLESS STEEL BUTT WELD FITTINGS 138 - 141
- STAINLESS STEEL FITTINGS 108 - 115
- STAINLESS STEEL FERRULE FITTINGS 120 - 121
- TANK SUCTION EQUIPMENT 64
- THREADED GALVANIZED PIPE PIECES 56 - 62
- THREADED STAINLESS STEEL PIPE PIECES 63

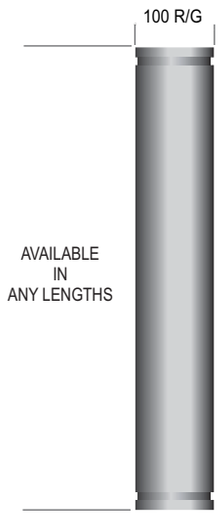

Riser Galvanized 100 mm Roll Grooved

PART No	DESCRIPTION
208181	100mm Hydrant Riser Galvanized Grooved both ends with any required length

Please specify required length at the time of order. All sizes are in mm

Riser Galvanized with 100mm Table E Flange

PART No	DESCRIPTION
208191	100mm Hydrant Riser Galvanized Grooved with Welded Table E Flange with any required length

Flanged risers using Flange adaptors & R/G coupling also available
Please specify required length at the time of order. All sizes are in mm

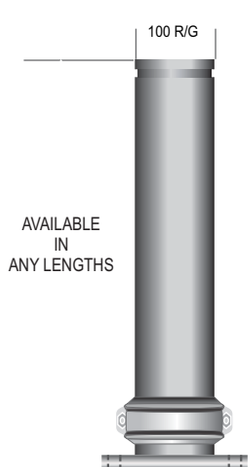

Riser Galvanized Coupled with 100mm Table E Flange

PART No	DESCRIPTION
208201	100mm Hydrant Riser Galvanized Grooved with Coupled Table E Flange with any required length

Riser Galvanized - 150mm Roll Grooved

PART No	DESCRIPTION
208211	150mm Hydrant Riser Galvanized Roll Grooved both ends with any required length

Please specify required length at the time of order. All sizes are in mm

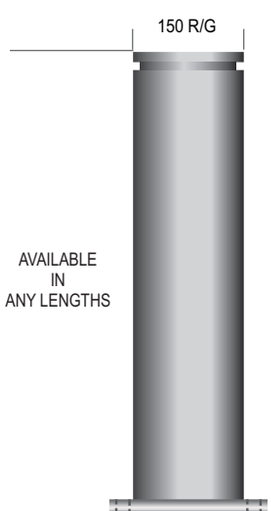

Riser Galvanized with 150mm Table E Flanged

PART No	DESCRIPTION
208218	150mm Hydrant Riser Galvanized Roll Grooved with Fixed Table E Flange with any required length

Flanged risers using Flange adaptors & R/G coupling also available
Please specify required length at the time of order. All sizes are in mm

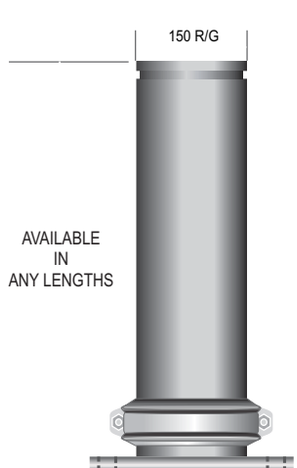

Riser Galvanized Coupled with 150mm Table E Flange

PART No	DESCRIPTION
208225	150mm Hydrant Riser Galvanized Roll Grooved with Coupled Table E Flange with any required length

Fire Australia Co Pty Ltd.
ABN No. 13165523713
47 Rushdale St. Knoxfield VIC-3180. Tel:(03) 9764 0020, Fax: (03) 9764 0023.
E-mail : sales@fireausco.com.au www.fireausco.com.au

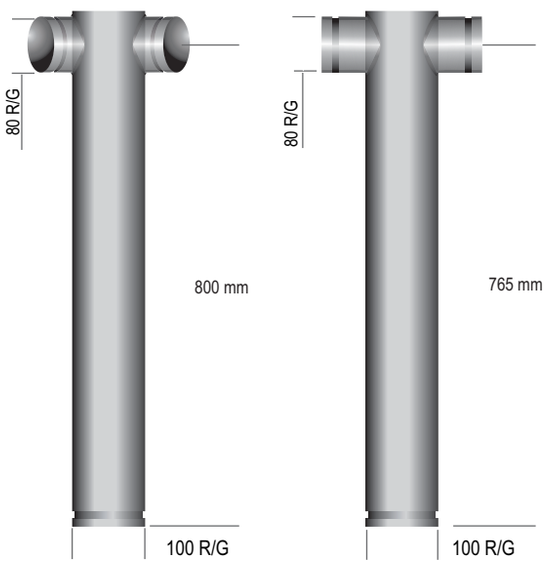

Dual Riser Galvanized - 100mm Roll Grooved

PART No	DESCRIPTION
208232	100mm Dual Hydrant Riser Galvanized Roll Grooved Straight Outlet
208239	100mm Dual Hydrant Riser Galvanized Roll Grooved Angular Outlet

Please specify required length at the time of order. All sizes are in mm

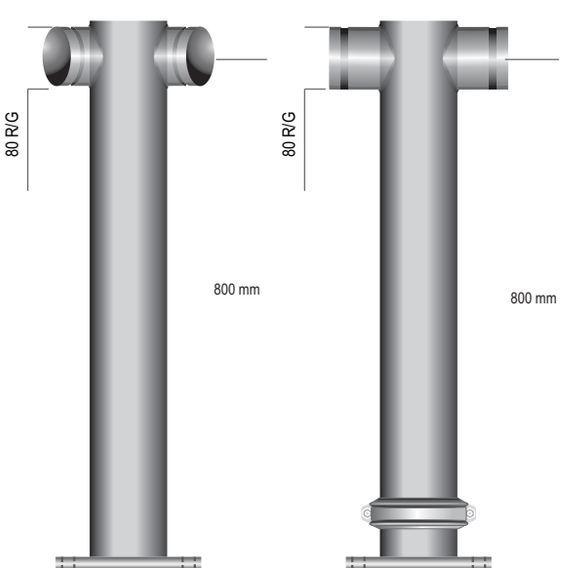

Dual Riser Galvanized with 100mm Table E Flanged

PART No	DESCRIPTION
208246	100mm Dual Hydrant Riser Galvanized Straight Outlet with Welded Table E Flange
208253	100mm Dual Hydrant Riser Galvanized Angular Outlet with Welded Table E Flange
208260	100mm Dual Hydrant Riser Galvanized Straight Outlet with Coupled Table E Flange Adaptor
208267	100mm Dual Hydrant Riser Galvanized Angular Outlet with Coupled Table E Flange

Flanged risers using Flange adaptors & R/G coupling also available
Please specify required length at the time of order. All sizes are in mm

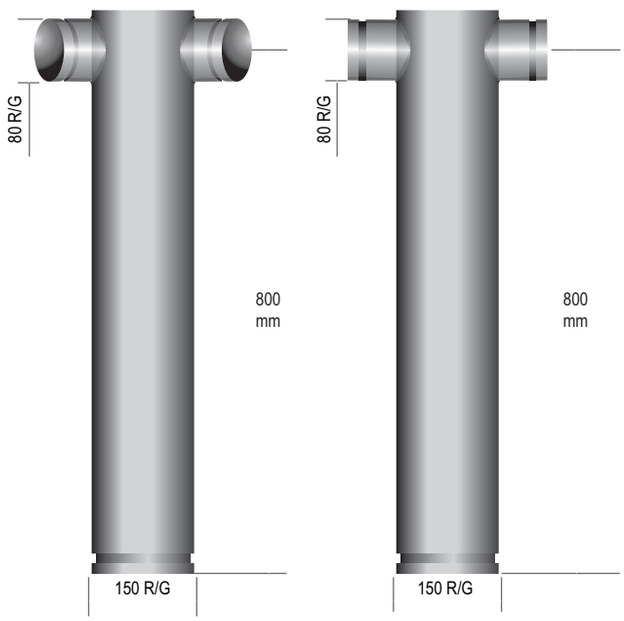

Dual Riser Galvanized - 150mm Roll Grooved

PART No	DESCRIPTION
208274	150mm Dual Hydrant Riser Galvanized Roll Grooved Straight Outlet
208275	150mm Dual Hydrant Riser Galvanized Roll Grooved Angular Outlet

Flanged risers using Flange adaptors & R/G coupling also available
Please specify required length at the time of order. All sizes are in mm

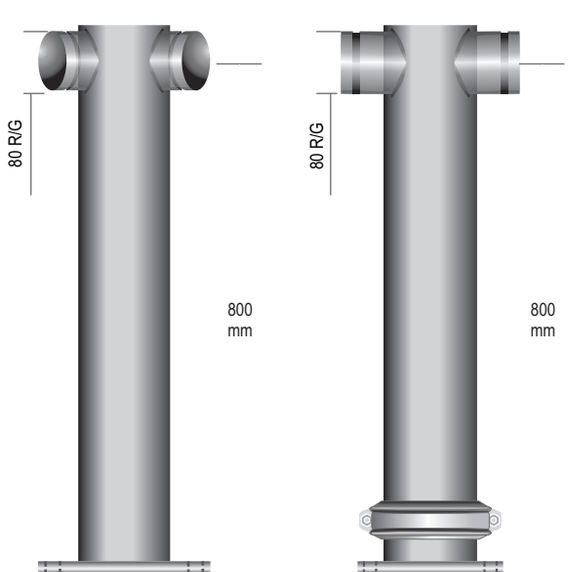

Dual Risers
Galvanized with 150mm Table E Flanged

PART No	DESCRIPTION
208276	150mm Gal Dual Hydrant Riser Straight Outlet with Welded Table E Flange
208283	150mm Gal Dual Hydrant Riser Angular Outlet with Welded Table E Flange
208290	150mm Gal Dual Hydrant Riser Straight Outlet with Coupled Table E Flange
208297	150mm Gal Dual Hydrant Riser Angular Outlet with Coupled Table E Flange

Flanged risers using Flange adaptors & R/G coupling also available
Please specify required length at the time of order. All sizes are in mm

Fire Australia Co Pty Ltd.
ABN No. 13165523713
47 Rushdale St. Knoxfield VIC-3180. Tel:(03) 9764 0020, Fax: (03) 9764 0023.
E-mail : sales@fireausco.com.au www.fireausco.com.au

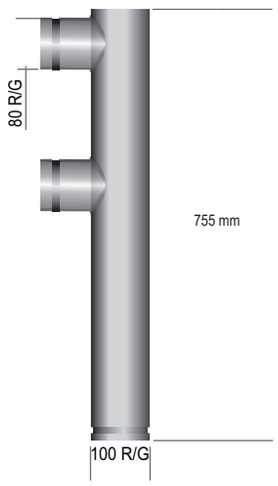

Dual Inline Riser - Gal & SS 100mm & 150mm Roll Grooved

PART No	DESCRIPTION
208304	100mm X 755mm Long Dual Inline Hydrant Riser Galvanized Grooved
208305	100mm X 755mm Long Dual Inline Hydrant Riser Stainless Steel Grooved
208306	150mm X 755mm Long Dual Inline Hydrant Riser Galvanized Grooved
208307	150mm X 755mm Long Dual Inline Hydrant Riser Stainless Steel Grooved

Flanged risers using Flange adaptors & R/G coupling also available

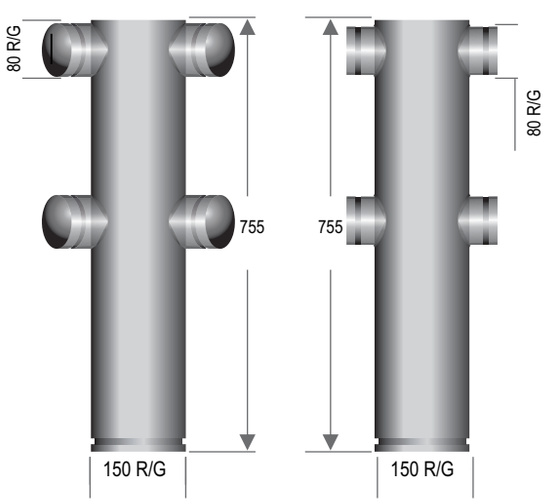

Quad Inline Riser - Gal & SS 150mm Roll Grooved

PART No	DESCRIPTION
208308	150mm X 755mm Long Quad Inline Hydrant Riser Galvanized Straight Outlet Grooved
208309	150mm X 755mm Long Quad Inline Hydrant Riser Stainless Steel Straight Outlet Grooved
208310	150mm X 755mm Long Quad Inline Hydrant Riser Galvanized Angular Outlet Grooved
208311	150mm X 755mm Long Quad Inline Hydrant Riser Stainless Steel Angular Outlet Grooved

Please specify required length at the time of order. All sizes are in mm

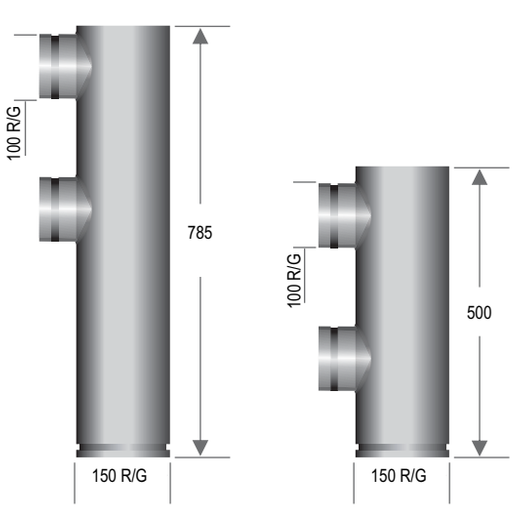

Quad Inline Booster Risers -Galvanized 150mm Roll Grooved

PART No	DESCRIPTION
208312	150mm X 785mm Long Quad Inline Booster Riser Galvanized Grooved
208313	150mm X 500mm Long Quad Inline Booster Riser Galvanized Grooved

Other sizes can also be made-please specify in the order.
All sizes are in mm.

Galvanized Pipe Piece
Medium (BS1387-85 BSP TAPER THREAD)

PART No	DESCRIPTION
208314	6mm X 40mm Gal Pipe Piece With BSPT Ends
208315	6mm X 50mm Gal Pipe Piece With BSPT Ends
208316	6mm X 60mm Gal Pipe Piece With BSPT Ends
208317	6mm X 75mm Gal Pipe Piece With BSPT Ends
208318	6mm X 80mm Gal Pipe Piece With BSPT Ends
208319	6mm X 100mm Gal Pipe Piece With BSPT Ends
208320	6mm X 120mm Gal Pipe Piece With BSPT Ends
208321	6mm X 140mm Gal Pipe Piece With BSPT Ends
208322	6mm X 150mm Gal Pipe Piece With BSPT Ends
208323	8mm X 40mm Gal Pipe Piece With BSPT Ends
208324	8mm X 50mm Gal Pipe Piece With BSPT Ends
208325	8mm X 60mm Gal Pipe Piece With BSPT Ends
208326	8mm X 75mm Gal Pipe Piece With BSPT Ends
208327	8mm X 80mm Gal Pipe Piece With BSPT Ends
208328	8mm X 100mm Gal Pipe Piece With BSPT Ends
208329	8mm X 120mm Gal Pipe Piece With BSPT Ends
208330	8mm X 140mm Gal Pipe Piece With BSPT Ends
208331	8mm X 150mm Gal Pipe Piece With BSPT Ends
208332	10mm X 40mm Gal Pipe Piece With BSPT Ends
208333	10mm X 50mm Gal Pipe Piece With BSPT Ends
208334	10mm X 60mm Gal Pipe Piece With BSPT Ends
208335	10mm X 75mm Gal Pipe Piece With BSPT Ends
208336	10mm X 80mm Gal Pipe Piece With BSPT Ends
208337	10mm X 100mm Gal Pipe Piece With BSPT Ends
208339	10mm X 140mm Gal Pipe Piece With BSPT Ends
208340	10mm X 150mm Gal Pipe Piece With BSPT Ends
208341	15mm X 40mm Gal Pipe Piece With BSPT Ends
208342	15mm X 50mm Gal Pipe Piece With BSPT Ends
208343	15mm X 60mm Gal Pipe Piece With BSPT Ends
208344	15mm X 75mm Gal Pipe Piece With BSPT Ends
208345	15mm X 80mm Gal Pipe Piece With BSPT Ends
208346	15mm X 100mm Gal Pipe Piece With BSPT Ends
208347	15mm X 120mm Gal Pipe Piece With BSPT Ends
208348	15mm X 140mm Gal Pipe Piece With BSPT Ends
208349	15mm X 150mm Gal Pipe Piece With BSPT Ends
208350	15mm X 200mm Gal Pipe Piece With BSPT Ends
208351	15mm X 250mm Gal Pipe Piece With BSPT Ends
208352	15mm X 300mm Gal Pipe Piece With BSPT Ends
208353	15mm X 350mm Gal Pipe Piece With BSPT Ends
208354	15mm X 400mm Gal Pipe Piece With BSPT Ends
208355	15mm X 450mm Gal Pipe Piece With BSPT Ends
208356	15mm X 500mm Gal Pipe Piece With BSPT Ends
208357	15mm X 550mm Gal Pipe Piece With BSPT Ends
208358	15mm X 600mm Gal Pipe Piece With BSPT Ends
208359	15mm X 650mm Gal Pipe Piece With BSPT Ends
208360	15mm X 700mm Gal Pipe Piece With BSPT Ends
208361	15mm X 750mm Gal Pipe Piece With BSPT Ends

Fire Australia Co Pty Ltd.
ABN No. 13165523713
47 Rushdale St. Knoxfield VIC-3180. Tel:(03) 9764 0020, Fax: (03) 9764 0023.
E-mail : sales@fireausco.com.au www.fireausco.com.au

FIRE AUSTRALIA CO

Galvanized Pipe Piece
Medium (BS1387-85 BSP TAPER THREAD)

PART No	DESCRIPTION
208362	15mm X 800mm Gal Pipe Piece With BSPT Ends
208363	15mm X 850mm Gal Pipe Piece With BSPT Ends
208364	15mm X 900mm Gal Pipe Piece With BSPT Ends
208365	15mm X 950mm Gal Pipe Piece With BSPT Ends
208366	15mm X 1000mm Gal Pipe Piece With BSPT Ends
208367	15mm X 1050mm Gal Pipe Piece With BSPT Ends
208368	15mm X 1220mm Gal Pipe Piece With BSPT Ends
208369	15mm X 1524mm Gal Pipe Piece With BSPT Ends
208370	15mm X 1829mm Gal Pipe Piece With BSPT Ends
208371	20mm X 40mm Gal Pipe Piece With BSPT Ends
208372	20mm X 50mm Gal Pipe Piece With BSPT Ends
208373	20mm X 60mm Gal Pipe Piece With BSPT Ends
208374	20mm X 75mm Gal Pipe Piece With BSPT Ends
208375	20mm X 80mm Gal Pipe Piece With BSPT Ends
208376	20mm X 100mm Gal Pipe Piece With BSPT Ends
208377	20mm X 120mm Gal Pipe Piece With BSPT Ends
208378	20mm X 140mm Gal Pipe Piece With BSPT Ends
208379	20mm X 150mm Gal Pipe Piece With BSPT Ends
208380	20mm X 200mm Gal Pipe Piece With BSPT Ends
208381	20mm X 250mm Gal Pipe Piece With BSPT Ends
208382	20mm X 300mm Gal Pipe Piece With BSPT Ends
208383	20mm X 350mm Gal Pipe Piece With BSPT Ends
208384	20mm X 400mm Gal Pipe Piece With BSPT Ends
208385	20mm X 450mm Gal Pipe Piece With BSPT Ends
208386	20mm X 500mm Gal Pipe Piece With BSPT Ends
208387	20mm X 550mm Gal Pipe Piece With BSPT Ends
208388	20mm X 600mm Gal Pipe Piece With BSPT Ends
208389	20mm X 650mm Gal Pipe Piece With BSPT Ends
208390	20mm X 700mm Gal Pipe Piece With BSPT Ends
208391	20mm X 750mm Gal Pipe Piece With BSPT Ends
208392	20mm X 800mm Gal Pipe Piece With BSPT Ends
208393	20mm X 850mm Gal Pipe Piece With BSPT Ends
208394	20mm X 900mm Gal Pipe Piece With BSPT Ends
208395	20mm X 950mm Gal Pipe Piece With BSPT Ends
208396	20mm X 1000mm Gal Pipe Piece With BSPT Ends
208397	20mm X 1050mm Gal Pipe Piece With BSPT Ends
208398	20mm X 1220mm Gal Pipe Piece With BSPT Ends
208399	20mm X 1524mm Gal Pipe Piece With BSPT Ends
208400	20mm X 1829mm Gal Pipe Piece With BSPT Ends
208401	25mm X 50mm Gal Pipe Piece With BSPT Ends
208402	25mm X 60mm Gal Pipe Piece With BSPT Ends
208403	25mm X 75mm Gal Pipe Piece With BSPT Ends
208404	25mm X 80mm Gal Pipe Piece With BSPT Ends
208405	25mm X 100mm Gal Pipe Piece With BSPT Ends
208406	25mm X 120mm Gal Pipe Piece With BSPT Ends
208407	25mm X 140mm Gal Pipe Piece With BSPT Ends
208408	25mm X 150mm Gal Pipe Piece With BSPT Ends
208409	25mm X 200mm Gal Pipe Piece With BSPT Ends
208410	25mm X 250mm Gal Pipe Piece With BSPT Ends

Galvanized Pipe Piece
Medium (BS1387-85 BSP TAPER THREAD)

PART No	DESCRIPTION
208411	25mm X 300mm Gal Pipe Piece With BSPT Ends
208412	25mm X 350mm Gal Pipe Piece With BSPT Ends
208413	25mm X 400mm Gal Pipe Piece With BSPT Ends
208414	25mm X 450mm Gal Pipe Piece With BSPT Ends
208415	25mm X 500mm Gal Pipe Piece With BSPT Ends
208416	25mm X 550mm Gal Pipe Piece With BSPT Ends
208417	25mm X 600mm Gal Pipe Piece With BSPT Ends
208418	25mm X 650mm Gal Pipe Piece With BSPT Ends
208419	25mm X 700mm Gal Pipe Piece With BSPT Ends
208420	25mm X 750mm Gal Pipe Piece With BSPT Ends
208421	25mm X 800mm Gal Pipe Piece With BSPT Ends
208422	25mm X 850mm Gal Pipe Piece With BSPT Ends
208423	25mm X 900mm Gal Pipe Piece With BSPT Ends
208424	25mm X 950mm Gal Pipe Piece With BSPT Ends
208425	25mm X 1000mm Gal Pipe Piece With BSPT Ends
208426	25mm X 1050mm Gal Pipe Piece With BSPT Ends
208427	25mm X 1220mm Gal Pipe Piece With BSPT Ends
208428	25mm X 1524mm Gal Pipe Piece With BSPT Ends
208429	25mm X 1829mm Gal Pipe Piece With BSPT End
208430	32mm X 50mm Gal Pipe Piece With BSPT Ends
208431	32mm X 60mm Gal Pipe Piece With BSPT Ends
208432	32mm X 75mm Gal Pipe Piece With BSPT Ends
208433	32mm X 80mm Gal Pipe Piece With BSPT Ends
208434	32mm X 100mm Gal Pipe Piece With BSPT Ends
208435	32mm X 120mm Gal Pipe Piece With BSPT Ends
208436	32mm X 140mm Gal Pipe Piece With BSPT Ends
208437	32mm X 150mm Gal Pipe Piece With BSPT Ends
208438	32mm X 200mm Gal Pipe Piece With BSPT Ends
208439	32mm X 250mm Gal Pipe Piece With BSPT Ends
208440	32mm X 300mm Gal Pipe Piece With BSPT Ends
208441	32mm X 350mm Gal Pipe Piece With BSPT Ends
208442	32mm X 400mm Gal Pipe Piece With BSPT Ends
208443	32mm X 450mm Gal Pipe Piece With BSPT Ends
208444	32mm X 500mm Gal Pipe Piece With BSPT Ends
208445	32mm X 550mm Gal Pipe Piece With BSPT Ends
208446	32mm X 600mm Gal Pipe Piece With BSPT Ends
208447	32mm X 650mm Gal Pipe Piece With BSPT Ends
208448	32mm X 700mm Gal Pipe Piece With BSPT Ends
208449	32mm X 750mm Gal Pipe Piece With BSPT Ends
208450	32mm X 800mm Gal Pipe Piece With BSPT Ends
208451	32mm X 850mm Gal Pipe Piece With BSPT Ends
208452	32mm X 900mm Gal Pipe Piece With BSPT Ends
208453	32mm X 950mm Gal Pipe Piece With BSPT Ends
208454	32mm X 1000mm Gal Pipe Piece With BSPT Ends
208455	32mm X 1050mm Gal Pipe Piece With BSPT Ends
208456	32mm X 1220mm Gal Pipe Piece With BSPT Ends
208457	32mm X 1524mm Gal Pipe Piece With BSPT Ends
208458	32mm X 1829mm Gal Pipe Piece With BSPT Ends

Fire Australia Co Pty Ltd.
ABN No. 13165523713
47 Rushdale St. Knoxfield VIC-3180. Tel:(03) 9764 0020, Fax: (03) 9764 0023.
E-mail : sales@fireausco.com.au www.fireausco.com.au

FIRE AUSTRALIA CO

Galvanized Pipe Piece
Medium (BS1387-85 BSP TAPER THREAD)

PART No	DESCRIPTION
208459	40mm X 60mm Gal Pipe Piece With BSPT Ends
208460	40mm X 75mm Gal Pipe Piece With BSPT Ends
208461	40mm X 80mm Gal Pipe Piece With BSPT Ends
208462	40mm X 100mm Gal Pipe Piece With BSPT Ends
208463	40mm X 120mm Gal Pipe Piece With BSPT Ends
208464	40mm X 140mm Gal Pipe Piece With BSPT Ends
208465	40mm X 150mm Gal Pipe Piece With BSPT Ends
208466	40mm X 200mm Gal Pipe Piece With BSPT Ends
208467	40mm X 250mm Gal Pipe Piece With BSPT Ends
208468	40mm X 300mm Gal Pipe Piece With BSPT Ends
208469	40mm X 350mm Gal Pipe Piece With BSPT Ends
208470	40mm X 400mm Gal Pipe Piece With BSPT Ends
208471	40mm X 450mm Gal Pipe Piece With BSPT Ends
208472	40mm X 500mm Gal Pipe Piece With BSPT Ends
208473	40mm X 550mm Gal Pipe Piece With BSPT Ends
208474	40mm X 600mm Gal Pipe Piece With BSPT Ends
208475	40mm X 650mm Gal Pipe Piece With BSPT Ends
208476	40mm X 700mm Gal Pipe Piece With BSPT Ends
208477	40mm X 750mm Gal Pipe Piece With BSPT Ends
208478	40mm X 800mm Gal Pipe Piece With BSPT Ends
208479	40mm X 850mm Gal Pipe Piece With BSPT Ends
208480	40mm X 900mm Gal Pipe Piece With BSPT Ends
208481	40mm X 950mm Gal Pipe Piece With BSPT Ends
208482	40mm X 1000mm Gal Pipe Piece With BSPT Ends
208483	40mm X 1050mm Gal Pipe Piece With BSPT Ends
208484	40mm X 1220mm Gal Pipe Piece With BSPT Ends
208485	40mm X 1524mm Gal Pipe Piece With BSPT Ends
208486	40mm X 1829mm Gal Pipe Piece With BSPT Ends
208487	50mm X 60mm Gal Pipe Piece With BSPT Ends
208488	50mm X 75mm Gal Pipe Piece With BSPT Ends
208489	50mm X 80mm Gal Pipe Piece With BSPT Ends
208490	50mm X 100mm Gal Pipe Piece With BSPT Ends
208491	50mm X 120mm Gal Pipe Piece With BSPT Ends
208492	50mm X 140mm Gal Pipe Piece With BSPT Ends
208493	50mm X 150mm Gal Pipe Piece With BSPT Ends
208494	50mm X 200mm Gal Pipe Piece With BSPT Ends
208495	50mm X 250mm Gal Pipe Piece With BSPT Ends
208496	50mm X 300mm Gal Pipe Piece With BSPT Ends
208497	50mm X 350mm Gal Pipe Piece With BSPT Ends
208498	50mm X 400mm Gal Pipe Piece With BSPT Ends
208499	50mm X 450mm Gal Pipe Piece With BSPT Ends
208500	50mm X 500mm Gal Pipe Piece With BSPT Ends
208501	50mm X 550mm Gal Pipe Piece With BSPT Ends
208502	50mm X 600mm Gal Pipe Piece With BSPT Ends
208503	50mm X 650mm Gal Pipe Piece With BSPT Ends
208504	50mm X 700mm Gal Pipe Piece With BSPT Ends
208505	50mm X 750mm Gal Pipe Piece With BSPT Ends
208506	50mm X 800mm Gal Pipe Piece With BSPT Ends
208507	50mm X 850mm Gal Pipe Piece With BSPT Ends
208508	50mm X 900mm Gal Pipe Piece With BSPT Ends

Fire Australia Co Pty Ltd.
ABN No. 13165523713
47 Rushdale St. Knoxfield VIC-3180. Tel:(03) 9764 0020, Fax: (03) 9764 0023.
E-mail : sales@fireausco.com.au www.fireausco.com.au

Galvanized Pipe Piece
Medium (BS1387-85 BSP TAPER THREAD)

PART No	DESCRIPTION
208509	50mm X 950mm Gal Pipe Piece With BSPT Ends
208510	50mm X 1000mm Gal Pipe Piece With BSPT Ends
208511	50mm X 1050mm Gal Pipe Piece With BSPT Ends
208512	50mm X 1220mm Gal Pipe Piece With BSPT Ends
208513	50mm X 5024mm Gal Pipe Piece With BSPT Ends
208514	50mm X 1829mm Gal Pipe Piece With BSPT Ends
208515	65mm X 75mm Gal Pipe Piece With BSPT Ends
208516	65mm X 80mm Gal Pipe Piece With BSPT Ends
208517	65mm X 100mm Gal Pipe Piece With BSPT Ends
208518	65mm X 120mm Gal Pipe Piece With BSPT Ends
208519	65mm X 140mm Gal Pipe Piece With BSPT Ends
208520	65mm X 150mm Gal Pipe Piece With BSPT Ends
208521	65mm X 200mm Gal Pipe Piece With BSPT Ends
208522	65mm X 250mm Gal Pipe Piece With BSPT Ends
208523	65mm X 300mm Gal Pipe Piece With BSPT Ends
208524	65mm X 350mm Gal Pipe Piece With BSPT Ends
208525	65mm X 400mm Gal Pipe Piece With BSPT Ends
208526	65mm X 450mm Gal Pipe Piece With BSPT Ends
208527	65mm X 500mm Gal Pipe Piece With BSPT Ends
208528	65mm X 550mm Gal Pipe Piece With BSPT Ends
208529	65mm X 600mm Gal Pipe Piece With BSPT Ends
208530	65mm X 650mm Gal Pipe Piece With BSPT Ends
208531	65mm X 700mm Gal Pipe Piece With BSPT Ends
208532	65mm X 750mm Gal Pipe Piece With BSPT Ends
208533	65mm X 800mm Gal Pipe Piece With BSPT Ends
208534	65mm X 850mm Gal Pipe Piece With BSPT Ends
208535	65mm X 900mm Gal Pipe Piece With BSPT Ends
208536	65mm X 950mm Gal Pipe Piece With BSPT Ends
208537	65mm X 1000mm Gal Pipe Piece With BSPT Ends
208538	65mm X 1050mm Gal Pipe Piece With BSPT Ends
208539	65mm X 1220mm Gal Pipe Piece With BSPT Ends
208540	65mm X 1829mm Gal Pipe Piece With BSPT Ends
208541	80mm X 75mm Gal Pipe Piece With BSPT Ends
208542	80mm X 80mm Gal Pipe Piece With BSPT Ends
208543	80mm X 100mm Gal Pipe Piece With BSPT Ends
208544	80mm X 120mm Gal Pipe Piece With BSPT Ends
208545	80mm X 140mm Gal Pipe Piece With BSPT Ends
208546	80mm X 650mm Gal Pipe Piece With BSPT Ends
208547	80mm X 200mm Gal Pipe Piece With BSPT Ends
208548	80mm X 250mm Gal Pipe Piece With BSPT Ends
208549	80mm X 300mm Gal Pipe Piece With BSPT Ends
208550	80mm X 350mm Gal Pipe Piece With BSPT Ends
208551	80mm X 400mm Gal Pipe Piece With BSPT Ends
208552	80mm X 450mm Gal Pipe Piece With BSPT Ends
208553	80mm X 500mm Gal Pipe Piece With BSPT Ends
208554	80mm X 550mm Gal Pipe Piece With BSPT Ends
208555	80mm X 600mm Gal Pipe Piece With BSPT Ends
208556	80mm X 650mm Gal Pipe Piece With BSPT Ends
208557	80mm X 700mm Gal Pipe Piece With BSPT Ends

Fire Australia Co Pty Ltd.
ABN No. 13165523713
47 Rushdale St. Knoxfield VIC-3180. Tel:(03) 9764 0020, Fax: (03) 9764 0023.
E-mail : sales@fireausco.com.au www.fireausco.com.au

FIRE AUSTRALIA CO

Galvanized Pipe Piece
Medium (BS1387-85 BSP TAPER THREAD)

PART No	DESCRIPTION
208558	80mm X 750mm Gal Pipe Piece With BSPT Ends
208559	80mm X 800mm Gal Pipe Piece With BSPT Ends
208560	80mm X 850mm Gal Pipe Piece With BSPT Ends
208561	80mm X 900mm Gal Pipe Piece With BSPT Ends
208562	80mm X 950mm Gal Pipe Piece With BSPT Ends
208563	80mm X 1000mm Gal Pipe Piece With BSPT Ends
208564	80mm X 1050mm Gal Pipe Piece With BSPT Ends
208565	80mm X 1220mm Gal Pipe Piece With BSPT Ends
208566	80mm X 1829mm Gal Pipe Piece With BSPT Ends
208567	100mm X 100mm Gal Pipe Piece With BSPT Ends
208568	100mm X 120mm Gal Pipe Piece With BSPT Ends
208569	100mm X 140mm Gal Pipe Piece With BSPT Ends
208570	100mm X 150mm Gal Pipe Piece With BSPT Ends
208571	100mm X 200mm Gal Pipe Piece With BSPT Ends
208572	100mm X 250mm Gal Pipe Piece With BSPT Ends
208573	100mm X 300mm Gal Pipe Piece With BSPT Ends
208574	100mm X 350mm Gal Pipe Piece With BSPT Ends
208575	100mm X 400mm Gal Pipe Piece With BSPT Ends
208576	100mm X 450mm Gal Pipe Piece With BSPT Ends
208577	100mm X 500mm Gal Pipe Piece With BSPT Ends
208578	100mm X 550mm Gal Pipe Piece With BSPT Ends
208579	100mm X 600mm Gal Pipe Piece With BSPT Ends
208580	100mm X 650mm Gal Pipe Piece With BSPT Ends
208581	100mm X 700mm Gal Pipe Piece With BSPT Ends
208582	100mm X 750mm Gal Pipe Piece With BSPT Ends
208583	100mm X 800mm Gal Pipe Piece With BSPT Ends
208584	100mm X 850mm Gal Pipe Piece With BSPT Ends
208585	100mm X 900mm Gal Pipe Piece With BSPT Ends
208586	100mm X 950mm Gal Pipe Piece With BSPT Ends
208587	100mm X 1000mm Gal Pipe Piece With BSPT Ends
208588	100mm X 1050mm Gal Pipe Piece With BSPT Ends
208589	100mm X 1220mm Gal Pipe Piece With BSPT Ends
208590	100mm X 1829mm Gal Pipe Piece With BSPT Ends
208591	125mm X 100mm Gal Pipe Piece With BSPT Ends
208592	125mm X 120mm Gal Pipe Piece With BSPT Ends
208593	125mm X 140mm Gal Pipe Piece With BSPT Ends
208594	125mm X 150mm Gal Pipe Piece With BSPT Ends
208595	125mm X 200mm Gal Pipe Piece With BSPT Ends
208596	125mm X 250mm Gal Pipe Piece With BSPT Ends
208597	125mm X 300mm Gal Pipe Piece With BSPT Ends
208598	125mm X 350mm Gal Pipe Piece With BSPT Ends
208599	125mm X 400mm Gal Pipe Piece With BSPT Ends
208600	125mm X 450mm Gal Pipe Piece With BSPT Ends
208601	125mm X 500mm Gal Pipe Piece With BSPT Ends
208602	125mm X 550mm Gal Pipe Piece With BSPT Ends
208603	125mm X 600mm Gal Pipe Piece With BSPT Ends
208604	125mm X 650mm Gal Pipe Piece With BSPT Ends
208605	125mm X 700mm Gal Pipe Piece With BSPT Ends
208606	125mm X 750mm Gal Pipe Piece With BSPT Ends

Fire Australia Co Pty Ltd.
ABN No. 13165523713
47 Rushdale St. Knoxfield VIC-3180. Tel:(03) 9764 0020, Fax: (03) 9764 0023.
E-mail : sales@fireausco.com.au www.fireausco.com.au

Galvanized Pipe Piece
Medium (BS1387-85 BSP TAPER THREAD)

PART No	DESCRIPTION
208607	125mm X 800mm Gal Pipe Piece With BSPT Ends
208608	125mm X 850mm Gal Pipe Piece With BSPT Ends
208609	125mm X 900mm Gal Pipe Piece With BSPT Ends
208610	125mm X 950mm Gal Pipe Piece With BSPT Ends
208611	125mm X 1000mm Gal Pipe Piece With BSPT Ends
208612	125mm X 1050mm Gal Pipe Piece With BSPT Ends
208613	125mm X 1220mm Gal Pipe Piece With BSPT Ends
208614	125mm X 1829mm Gal Pipe Piece With BSPT Ends
208615	150mm X 100mm Gal Pipe Piece With BSPT Ends
208616	150mm X 120mm Gal Pipe Piece With BSPT Ends
208617	150mm X 140mm Gal Pipe Piece With BSPT Ends
208618	150mm X 150mm Gal Pipe Piece With BSPT Ends
208619	150mm X 200mm Gal Pipe Piece With BSPT Ends
208620	150mm X 250mm Gal Pipe Piece With BSPT Ends
208621	150mm X 300mm Gal Pipe Piece With BSPT Ends
208622	150mm X 350mm Gal Pipe Piece With BSPT Ends
208623	150mm X 400mm Gal Pipe Piece With BSPT Ends
208624	150mm X 450mm Gal Pipe Piece With BSPT Ends
208625	150mm X 500mm Gal Pipe Piece With BSPT Ends
208626	150mm X 550mm Gal Pipe Piece With BSPT Ends
208627	150mm X 600mm Gal Pipe Piece With BSPT Ends
208628	150mm X 650mm Gal Pipe Piece With BSPT Ends
208629	150mm X 700mm Gal Pipe Piece With BSPT Ends
208630	150mm X 750mm Gal Pipe Piece With BSPT Ends
208631	150mm X 800mm Gal Pipe Piece With BSPT Ends
208632	150mm X 850mm Gal Pipe Piece With BSPT Ends
208633	150mm X 900mm Gal Pipe Piece With BSPT Ends
208634	150mm X 950mm Gal Pipe Piece With BSPT Ends
208635	150mm X 1000mm Gal Pipe Piece With BSPT Ends
208636	150mm X 1050mm Gal Pipe Piece With BSPT Ends
208637	150mm X 1220mm Gal Pipe Piece With BSPT Ends
208638	150mm X 1829mm Gal Pipe Piece With BSPT Ends

Fire Australia Co Pty Ltd.
ABN No. 13165523713
47 Rushdale St. Knoxfield VIC-3180. Tel:(03) 9764 0020, Fax: (03) 9764 0023.
E-mail : sales@fireausco.com.au www.fireausco.com.au

FIRE AUSTRALIA CO

Stainless Steel Pipe Piece With BSPT Ends

PART No	DESCRIPTION
144238	15mm X 100mm 316 S/S SCH 40 Pipe Piece BSPT
144239	15mm X 150mm 316 S/S SCH 40 Pipe Piece BSPT
144240	15mm X 200mm 316 S/S SCH 40 Pipe Piece BSPT
144241	15mm X 300mm 316 S/S SCH 40 Pipe Piece BSPT
144242	15mm X 600mm 316 S/S SCH 40 Pipe Piece BSPT
144243	20mm X 100mm 316 S/S SCH 40 Pipe Piece BSPT
144244	20mm X 150mm 316 S/S SCH 40 Pipe Piece BSPT
144245	20mm X 200mm 316 S/S SCH 40 Pipe Piece BSPT
144246	20mm X 300mm 316 S/S SCH 40 Pipe Piece BSPT
144247	20mm X 600mm 316 S/S SCH 40 Pipe Piece BSPT
144248	25mm X 100mm 316 S/S SCH 40 Pipe Piece BSPT
144249	25mm X 150mm 316 S/S SCH 40 Pipe Piece BSPT
144250	25mm X 200mm 316 S/S SCH 40 Pipe Piece BSPT
144251	25mm X 300mm 316 S/S SCH 40 Pipe Piece BSPT
144252	25mm X 600mm 316 S/S SCH 40 Pipe Piece BSPT
144253	32mm X 100mm 316 S/S SCH 40 Pipe Piece BSPT
144254	32mm X 150mm 316 S/S SCH 40 Pipe Piece BSPT
144255	32mm X 200mm 316 S/S SCH 40 Pipe Piece BSPT
144256	32mm X 300mm 316 S/S SCH 40 Pipe Piece BSPT
144257	32mm X 600mm 316 S/S SCH 40 Pipe Piece BSPT
144258	40mm X 100mm 316 S/S SCH 40 Pipe Piece BSPT
144259	40mm X 150mm 316 S/S SCH 40 Pipe Piece BSPT
144260	40mm X 200mm 316 S/S SCH 40 Pipe Piece BSPT
144261	40mm X 300mm 316 S/S SCH 40 Pipe Piece BSPT
144262	40mm X 450mm 316 S/S SCH 40 Pipe Piece BSPT
144263	40mm X 600mm 316 S/S SCH 40 Pipe Piece BSPT
144264	50mm X 100mm 316 S/S SCH 40 Pipe Piece BSPT
144265	50mm X 150mm 316 S/S SCH 40 Pipe Piece BSPT
144266	50mm X 200mm 316 S/S SCH 40 Pipe Piece BSPT
144267	50mm X 300mm 316 S/S SCH 40 Pipe Piece BSPT
144268	50mm X 450mm 316 S/S SCH 40 Pipe Piece BSPT
144269	50mm X 600mm 316 S/S SCH 40 Pipe Piece BSPT

150 mm Tank Suction Assembly with R/G Bottom Inlet

PART No	DESCRIPTION
139001	Assembly With 150 mm Gear Operated Butterfly Valves or 150 mm Sluice/Gate Valve Option are available with or without support arrangement 150 mm Storz to 65 Storz with cap Options are available

Different combinations of 150 mm Storz to 65 mm Storz connections are available. Please specify at the time of order.

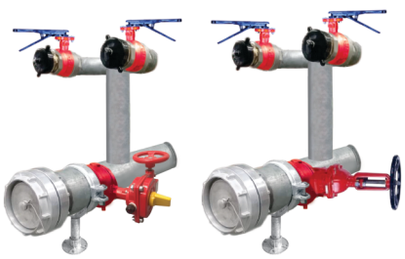

150 mm Tank Suction Assembly with R/G Back Inlet

PART No	DESCRIPTION
139081	Assembly With 150mm Gear Operated Butterfly Valves with or without support arrangement 150mm Storz to 65 Storz with cap Options are available
139082	Assembly With 150mm Sluice/Gate Valve with or without support arrangement 150mm Storz to 65 Storz with cap Options are available

150 mm Tank Anti Vortex Plates

PART No	DESCRIPTION
139083	150mm Tank Anti Vortex Plate Only
139084	200mm Tank Anti Vortex Plate Only
139085	150mm Tank Antivortex Plate With Height Of 350mm From bottom To Elbow Centre, 150 Elbow & 500mm Long 150mm Gal R/g Pipe
139086	150mm Tank Antivortex Plate With Height Of 380mm From Bottom To Elbow Centre, 150 Elbow & 500mm Long 150mm Gal R/g Pipe
139087	200mm Tank Antivortex Plate With Height Of 350mm From Bottom To Elbow Centre, 150 Elbow & 500mm Long 150mm Gal R/g Pipe
139088	200mm Tank Antivortex Plate With Height Of 380mm From Bottom To Elbow Centre, 200 Elbow & 500mm Long 200mm Gal R/g Pipe

Galvanized Roll Grooved Pipe - AS1074

PART No	DESCRIPTION					
208132	50mm	Pipe	Light	Wall	AS1074	Galvanized
208133	65mm	Pipe	Light	Wall	AS1074	Galvanized
208134	80mm	Pipe	Light	Wall	AS1074	Galvanized
208135	100mm	Pipe	Light	Wall	AS1074	Galvanized
208136	150mm	Pipe	Light	Wall	AS1074	Galvanized
208137	200mm	Pipe	Light	Wall	AS1074	Galvanized
208138	50mm	Pipe	Medium	Wall	AS1074	Galvanized
208139	65mm	Pipe	Medium	Wall	AS1074	Galvanized
208140	80mm	Pipe	Medium	Wall	AS1074	Galvanized
208141	100mm	Pipe	Medium	Wall	AS1074	Galvanized
208142	150mm	Pipe	Medium	Wall	AS1074	Galvanized
208143	200mm	Pipe	Medium	Wall	AS1074	Galvanized

Fire Australia Co Pty Ltd.
ABN No. 13165523713
47 Rushdale St. Knoxfield VIC-3180. Tel:(03) 9764 0020, Fax: (03) 9764 0023.
E-mail : sales@fireausco.com.au www.fireausco.com.au

FIRE AUSTRALIA CO

Medium Wall AS1074 Gal Pipe With Plain Ends

PART No	DESCRIPTION
208687	15mm Medium Wall AS1074 Gal Pipe Plain End
208688	20mm Medium Wall AS1074 Gal Pipe Plain End
208689	25mm Medium Wall AS1074 Gal Pipe Plain End
208690	32mm Medium Wall AS1074 Gal Pipe Plain End
208691	40mm Medium Wall AS1074 Gal Pipe Plain End
208692	50mm Medium Wall AS1074 Gal Pipe Plain End
208693	65mm Medium Wall AS1074 Gal Pipe Plain End
208694	80mm Medium Wall AS1074 Gal Pipe Plain End
208695	90mm Medium Wall AS1074 Gal Pipe Plain End
208696	100mm Medium Wall AS1074 Gal Pipe Plain End
208697	125mm Medium Wall AS1074 Gal Pipe Plain End
208698	150mm Medium Wall AS1074 Gal Pipe Plain End

Carbon Steel ERW Pipe

PART No	DESCRIPTION
208992	80mm API5L Sch10 ERW Pipe (m) 4.8mm W.T
208699	100mm API5L Sch10 ERW Pipe (m) 4.8mm W.T
208700	125mm API5L Sch10 ERW Pipe (m) 4.8mm W.T
208701	150mm API5L Sch10 ERW Pipe (m) 4.8mm W.T
208702	200mm API5L Sch10 ERW Pipe (m) 4.8mm W.T
208703	250mm API5L Sch10 ERW Pipe (m) 4.8mm W.T
208704	300mm API5L Sch10 ERW Pipe (m) 4.8mm W.T
208705	350mm API5L Sch10 ERW Pipe (m) 4.8mm W.T
208706	400mm API5L Sch10 ERW Pipe (m) 4.8mm W.T
208707	450mm API5L Sch10 ERW Pipe (m) 4.8mm W.T
208708	150mm API5L Sch20 ERW Pipe (m) 6.4mm W.T
208709	200mm API5L Sch20 ERW Pipe (m) 6.4mm W.T
208710	250mm API5L Sch20 ERW Pipe (m) 6.4mm W.T
208711	300mm API5L Sch20 ERW Pipe (m) 6.4mm W.T
208712	600mm API5L Sch20 ERW Pipe (m) 6.4mm W.T

Carbon Steel ERW Std Weight Pipe

PART No	DESCRIPTION
208713	100mm API5L Std ERW Pipe (m)
208714	125mm API5L Std ERW Pipe (m)
208715	150mm API5L Std ERW Pipe (m)
208716	200mm API5L Std ERW Pipe (m)
208717	250mm API5L Std ERW Pipe (m)
208718	300mm API5L Std ERW Pipe (m)
208719	350mm API5L Std ERW Pipe (m)
208720	400mm API5L Std ERW Pipe (m)
208721	450mm API5L Std ERW Pipe (m)
208722	500mm API5L Std ERW Pipe (m)

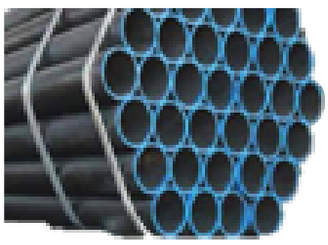

Carbon Steel A106B Std Weight Seamless Pipe

PART No	DESCRIPTION					
208723	300mm	API5L	Std	Seamless	Pipe	(m)
208724	350mm	API5L	Std	Seamless	Pipe	(m)
208725	400mm	API5L	Std	Seamless	Pipe	(m)
208726	450mm	API5L	Std	Seamless	Pipe	(m)

Carbon Steel A106B Seamless Pipe

PART No	DESCRIPTION					
208727	15mm	A106B	Sch40	Seamless	Pipe	(m)
208728	20mm	A106B	Sch40	Seamless	Pipe	(m)
208729	25mm	A106B	Sch40	Seamless	Pipe	(m)
208730	32mm	A106B	Sch40	Seamless	Pipe	(m)
208731	40mm	A106B	Sch40	Seamless	Pipe	(m)
208732	50mm	A106B	Sch40	Seamless	Pipe	(m)
208733	65mm	A106B	Sch40	Seamless	Pipe	(m)
208734	80mm	A106B	Sch40	Seamless	Pipe	(m)
208735	90mm	A106B	Sch40	Seamless	Pipe	(m)
208736	100mm	A106B	Sch40	Seamless	Pipe	(m)
208737	125mm	A106B	Sch40	Seamless	Pipe	(m)
208738	150mm	A106B	Sch40	Seamless	Pipe	(m)
208739	200mm	A106B	Sch40	Seamless	Pipe	(m)
208740	250mm	A106B	Sch40	Seamless	Pipe	(m)
208741	300mm	A106B	Sch40	Seamless	Pipe	(m)
208742	6mm	A106B	XS	Seamless	Pipe	(m)
208743	10mm	A106B	XS	Seamless	Pipe	(m)
208744	15mm	A106B	XS	Seamless	Pipe	(m)
208745	20mm	A106B	XS	Seamless	Pipe	(m)
208746	25mm	A106B	XS	Seamless	Pipe	(m)
208747	32mm	A106B	XS	Seamless	Pipe	(m)
208748	40mm	A106B	XS	Seamless	Pipe	(m)
208749	50mm	A106B	XS	Seamless	Pipe	(m)
208750	65mm	A106B	XS	Seamless	Pipe	(m)
208751	80mm	A106B	XS	Seamless	Pipe	(m)
208752	90mm	A106B	XS	Seamless	Pipe	(m)
208753	100mm	A106B	XS	Seamless	Pipe	(m)
208754	125mm	A106B	XS	Seamless	Pipe	(m)
208755	150mm	A106B	XS	Seamless	Pipe	(m)
208756	200mm	A106B	XS	Seamless	Pipe	(m)
208757	250mm	A106B	XS	Seamless	Pipe	(m)
208758	300mm	A106B	XS	Seamless	Pipe	(m)

Fire Australia Co Pty Ltd.
ABN No. 13165523713
47 Rushdale St. Knoxfield VIC-3180. Tel:(03) 9764 0020, Fax: (03) 9764 0023.
E-mail : sales@fireausco.com.au www.fireausco.com.au

FIRE AUSTRALIA CO

Stainless Steel Pipe

PART No	DESCRIPTION					
208759	6mm	Sch10	304	Stainless	Steel	Pipe
208760	10mm	Sch10	304	Stainless	Steel	Pipe
208761	15mm	Sch10	304	Stainless	Steel	Pipe
208762	20mm	Sch10	304	Stainless	Steel	Pipe
208763	25mm	Sch10	304	Stainless	Steel	Pipe
208764	32mm	Sch10	304	Stainless	Steel	Pipe
208765	40mm	Sch10	304	Stainless	Steel	Pipe
208766	50mm	Sch10	304	Stainless	Steel	Pipe
208767	65mm	Sch10	304	Stainless	Steel	Pipe
208768	80mm	Sch10	304	Stainless	Steel	Pipe
208769	100mm	Sch10	304	Stainless	Steel	Pipe
208770	125mm	Sch10	304	Stainless	Steel	Pipe
208771	150mm	Sch10	304	Stainless	Steel	Pipe
208772	6mm	Sch40	304	Stainless	Steel	Pipe
208773	10mm	Sch40	304	Stainless	Steel	Pipe
208774	15mm	Sch40	304	Stainless	Steel	Pipe
208775	20mm	Sch40	304	Stainless	Steel	Pipe
208776	25mm	Sch40	304	Stainless	Steel	Pipe
208777	32mm	Sch40	304	Stainless	Steel	Pipe
208778	40mm	Sch40	304	Stainless	Steel	Pipe
208779	50mm	Sch40	304	Stainless	Steel	Pipe
208780	65mm	Sch40	304	Stainless	Steel	Pipe
208781	80mm	Sch40	304	Stainless	Steel	Pipe
208782	100mm	Sch40	304	Stainless	Steel	Pipe
208783	125mm	Sch40	304	Stainless	Steel	Pipe
208784	150mm	Sch40	304	Stainless	Steel	Pipe
208785	6mm	Sch10	316	Stainless	Steel	Pipe
208786	10mm	Sch10	316	Stainless	Steel	Pipe
208787	15mm	Sch10	316	Stainless	Steel	Pipe
208788	20mm	Sch10	316	Stainless	Steel	Pipe
208789	25mm	Sch10	316	Stainless	Steel	Pipe
208790	32mm	Sch10	316	Stainless	Steel	Pipe
208791	40mm	Sch10	316	Stainless	Steel	Pipe
208792	50mm	Sch10	316	Stainless	Steel	Pipe
208793	65mm	Sch10	316	Stainless	Steel	Pipe
208794	80mm	Sch10	316	Stainless	Steel	Pipe
208795	100mm	Sch10	316	Stainless	Steel	Pipe
208796	125mm	Sch10	316	Stainless	Steel	Pipe
208797	150mm	Sch10	316	Stainless	Steel	Pipe
208798	6mm	Sch40	316	Stainless	Steel	Pipe
208799	10mm	Sch40	316	Stainless	Steel	Pipe
208800	15mm	Sch40	316	Stainless	Steel	Pipe
208801	20mm	Sch40	316	Stainless	Steel	Pipe
208802	25mm	Sch40	316	Stainless	Steel	Pipe
208803	32mm	Sch40	316	Stainless	Steel	Pipe
208804	40mm	Sch40	316	Stainless	Steel	Pipe
208805	50mm	Sch40	316	Stainless	Steel	Pipe
208806	65mm	Sch40	316	Stainless	Steel	Pipe
208807	80mm	Sch40	316	Stainless	Steel	Pipe
208808	100mm	Sch40	316	Stainless	Steel	Pipe
208809	125mm	Sch40	316	Stainless	Steel	Pipe
208810	150mm	Sch40	316	Stainless	Steel	Pipe

Tube Clamps Interlocking - Stainless Steel

PART No.	DESCRIPTION
208839	Tube Clamp Interlocking 18mm Stainless Steel
208840	Tube Clamp Interlocking 25mm Stainless Steel
208841	Tube Clamp Interlocking 32mm Stainless Steel
208842	Tube Clamp Interlocking 38mm Stainless Steel
208843	Tube Clamp Interlocking 50mm Stainless Steel
208844	Tube Clamp Interlocking 63mm Stainless Steel
208845	Tube Clamp Interlocking 76mm Stainless Steel
208846	Tube Clamp Interlocking 100mm Stainless Steel

Tube Clamps T Slot Interlocking - Stainless Steel

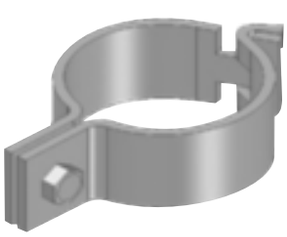

PART No.	DESCRIPTION
208847	Clamp T Slot Interlocking 18mm Stainless Steel
208848	Clamp T Slot Interlocking 25mm Stainless Steel
208849	Clamp T Slot Interlocking 31mm Stainless Steel
208850	Clamp T Slot Interlocking 38mm Stainless Steel
208851	Clamp T Slot Interlocking 50mm Stainless Steel
208852	Clamp T Slot Interlocking 63mm Stainless Steel
208853	Clamp T Slot Interlocking 76mm Stainless Steel
208854	Clamp T Slot Interlocking 101mm Stainless Steel

Pipe Clamps Galvanized

PART No.	DESCRIPTION
208153	Pipe Clamps Weldnut Galvanized 32mm X M10
208154	Pipe Clamps Weldnut Galvanized 50mm X M10
208155	Pipe Clamps Weldnut Galvanized 65mm X M10
208156	Pipe Clamps Weldnut Galvanized 80mm X M10
208157	Pipe Clamps Weldnut Galvanized 100mm X M10
208158	Pipe Clamps Weldnut Galvanized 100mm X M12
208159	Pipe Clamps Weldnut Galvanized 150mm X M10
208160	Pipe Clamps Weldnut Galvanized 150mm X M12

Fire Australia Co Pty Ltd.
ABN No. 13165523713
47 Rushdale St. Knoxfield VIC-3180. Tel:(03) 9764 0020, Fax: (03) 9764 0023.
E-mail : sales@fireausco.com.au www.fireausco.com.au

FIRE AUSTRALIA CO

Double Bolted Pipe Clamp Medium Duty - Galvanized

PART No.	DESCRIPTION
208653	40mm Pipe Gal Medium Duty Double Bolted Clamp With Bolts & Nuts
208654	50mm Pipe Gal Medium Duty Double Bolted Clamp With Bolts & Nuts
208655	65mm Pipe Gal Medium Duty Double Bolted Clamp With Bolts & Nuts
208656	80mm Pipe Gal Medium Duty Double Bolted Clamp With Bolts & Nuts
208657	100mm Pipe Gal Medium Duty Double Bolted Clamp With Bolts & Nuts
208658	125mm Pipe Gal Medium Duty Double Bolted Clamp With Bolts & Nuts
208659	150mm Pipe Gal Medium Duty Double Bolted Clamp With Bolts & Nuts

Double Bolted Clamps for Tubes - Stainless Steel

PART No.	DESCRIPTION
208811	12mm SS 304 Double Bolted Tube Clamp 20W`X 2 Thk With M6 Bolt & Nut
208812	18mm SS 304 Double Bolted Tube Clamp 25W X 3 Thk With M8 Bolt & Nut
208813	25mm SS 304 Double Bolted Tube Clamp 25W X 3 Thk With M8 Bolt & Nut
208814	31mm SS 304 Double Bolted Tube Clamp 25W X 3 Thk With M8 Bolt & Nut
208815	38mm SS 304 Double Bolted Tube Clamp 25W X 3 Thk With M8 Bolt & Nut
208816	50mm SS 304 Double Bolted Tube Clamp 25W X 3 Thk With M8 Bolt & Nut
208817	63mm SS 304 Double Bolted Tube Clamp 25W X 3 Thk With M8 Bolt & Nut
208818	76mm SS 304 Double Bolted Tube Clamp 25W X 3 Thk With M8 Bolt & Nut
208819	100mm SS 304 Double Bolted Tube Clamp 25W X 3 Thk With M8 Bolt & Nut
208820	125mm SS 304 Double Bolted Tube Clamp 25W X 3 Thk With M8 Bolt & Nut
208821	150mm SS 304 Double Bolted Tube Clamp 30W X 3 Thk With M8 Bolt & Nut
208822	200mm SS 304 Double Bolted Tube Clamp 40W X 5 Thk With M10 Bolt & Nut
208823	250mm SS 304 Double Bolted Tube Clamp 40W X 5 Thk With M10 Bolt & Nut
208824	300mm SS 304 Double Bolted Tube Clamp 40W X 5 Thk With M12 Bolt & Nut

Double Bolted Clamps for Pipes - Stainless Steel

PART No.	DESCRIPTION
208825	15mm SS 304 Double Bolted Pipe Clamp 25W X 3 Thk With M8 Bolt & Nut
208826	20mm SS 304 Double Bolted Pipe Clamp 25W X 3 Thk With M8 Bolt & Nut
208827	25mm SS 304 Double Bolted Pipe Clamp 25W X 3 Thk With M8 Bolt & Nut
208828	32mm SS 304 Double Bolted Pipe Clamp 25W X 3 Thk With M8 Bolt & Nut
208829	40mm SS 304 Double Bolted Pipe Clamp 25W X 3 Thk With M8 Bolt & Nut
208830	50mm SS 304 Double Bolted Pipe Clamp 25W X 3 Thk With M8 Bolt & Nut
208831	65mm SS 304 Double Bolted Pipe Clamp 25W X 3 Thk With M8 Bolt & Nut
208832	80mm SS 304 Double Bolted Pipe Clamp 25W X 3 Thk With M8 Bolt & Nut
208833	100mm SS 304 Double Bolted Pipe Clamp 25W X 3 Thk With M8 Bolt & Nut
208834	125mm SS 304 Double Bolted Pipe Clamp 25W X 3 Thk With M8 Bolt & Nut
208835	150mm SS 304 Double Bolted Pipe Clamp 25W X 3 Thk With M8 Bolt & Nut
208836	200mm SS 304 Double Bolted Pipe Clamp 40W X 5 Thk With M10 Bolt & Nut
208837	250mm SS 304 Double Bolted Pipe Clamp 40W X 5 Thk With M10 Bolt & Nut
208838	300mm SS 304 Double Bolted Pipe Clamp 40W X 5 Thk With M10 Bolt & Nut

Fire Australia Co Pty Ltd.
ABN No. 13165523713
47 Rushdale St. Knoxfield VIC-3180. Tel:(03) 9764 0020, Fax: (03) 9764 0023.
E-mail : sales@fireausco.com.au www.fireausco.com.au

Flange Adaptors

PART No	DESCRIPTION
208088	Flange Adaptor DI Gal 50mm Table D
208089	Flange Adaptor DI Gal 65mm Table D
208090	Flange Adaptor DI Gal 80mm Table D
208091	Flange Adaptor DI Gal 100mm Table D
208092	Flange Adaptor DI Gal 150mm Table E
208093	Flange Adaptor DI Gal 200mm Table E

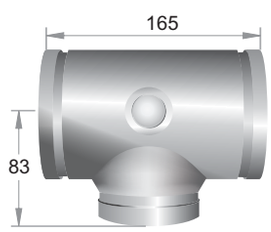

Hydrant Stack Tee

PART No	DESCRIPTION
208161	Hydrant Stack Tee Grooved DI Gal 100mm X 100mm X 80mm

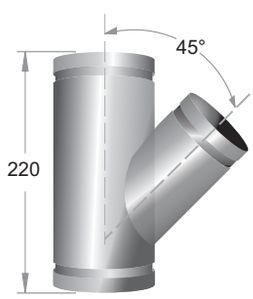

Tee 45° Offset Stack Reducing - Gal

PART No	DESCRIPTION
208163	45 Deg. Offset Stack Tee Grooved DI Gal 100mm X 80mm

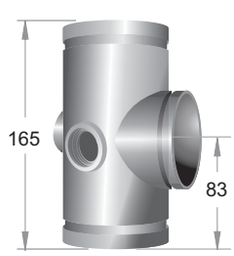

Hydrant Stack Tee with 25 mm BSP (F) - Gal

PART No	DESCRIPTION
208162	Hydrant Stack Tee with 25mm BSP Female Grooved DI Gal 100mm X 80mm

Fire Australia Co Pty Ltd.
ABN No. 13165523713
47 Rushdale St. Knoxfield VIC-3180. Tel:(03) 9764 0020, Fax: (03) 9764 0023.
E-mail : sales@fireausco.com.au www.fireausco.com.au

FIRE AUSTRALIA CO

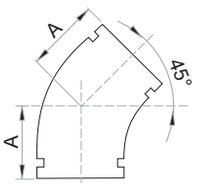

Elbow 45° Grooved - Gal

PART No	DESCRIPTION	PIPE OD (mm)	SIZE "A" (mm)
208106	Elbow 45° Grooved DI Gal 50mm	60.3	51
208107	Elbow 45° Grooved DI Gal 65mm	76.1	57
208108	Elbow 45° Grooved DI Gal 80mm	88.9	64
208109	Elbow 45° Grooved DI Gal 100mm	114.3	76
208110	Elbow 45° Grooved DI Gal 1250mm	141.3	83
208111	Elbow 45° Grooved DI Gal 150mm	165.1	89
208112	Elbow 45° Grooved DI Gal 200mm	219.1	108
208113	Elbow 45° Grooved DI Gal 250mm	273	121

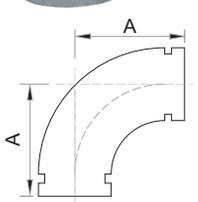

Elbow 90° Grooved - Gal

PART No	DESCRIPTION	PIPE OD (mm)	SIZE "A" (mm)
208114	Elbow 90° Grooved DI Gal 25mm	33.4	58
208115	Elbow 90° Grooved DI Gal 32mm	42.4	70
208116	Elbow 90° Grooved DI Gal 40mm	48.3	70
208117	Elbow 90° Grooved DI Gal 50mm	60.3	83
208118	Elbow 90° Grooved DI Gal 65mm	76.1	95
208119	Elbow 90° Grooved DI Gal 80mm	88.9	108
208120	Elbow 90° Grooved DI Gal 100mm	114.3	127
208121	Elbow 90° Grooved DI Gal 150mm	165.1	165
208122	Elbow 90° Grooved DI Gal 200mm	219.1	197

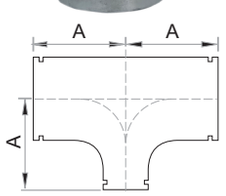

Tee Equal Grooved - Gal

PART No	DESCRIPTION	PIPE OD (mm)	SIZE "A" (mm)
208079	Equal Tee Grooved DI Gal 25mm	33.4	57
208080	Equal Tee Grooved DI Gal 32mm	42.4	70
208081	Equal Tee Grooved DI Gal 40mm	48.3	70
208082	Equal Tee Grooved DI Gal 50mm	60.3	83
208083	Equal Tee Grooved DI Gal 65mm	76.3	95
208084	Equal Tee Grooved DI Gal 80mm	88.9	108
208085	Equal Tee Grooved DI Gal 100mm	114.3	127
208086	Equal Tee Grooved DI Gal 150mm	165.1	165
208087	Equal Tee Grooved DI Gal 200mm	219.1	197

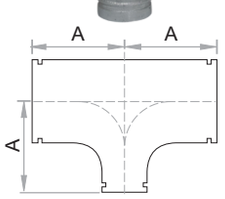

Tee Reducing Grooved - Gal

PART No	DESCRIPTION	PIPE OD (mm)	SIZE "A" (mm)
208070	Tee Reducing Grooved DI Gal 100 X 100 X 50mm	114.3 x 60.3	101
208071	Tee Reducing Grooved DI Gal 100 X 100 X 65mm	114.3 x 76.1	101
208072	Tee Reducing Grooved DI Gal 100 X 100 X 80mm	114.3 x 88.9	101
208073	Tee Reducing Grooved DI Gal 150 X 150 X 50mm	165.1 x 60.3	140
208074	Tee Reducing Grooved DI Gal 150 X 150 X 65mm	165.1 x 76.1	140
208075	Tee Reducing Grooved DI Gal 150 X 150 X 80mm	165.1 x 88.9	140
208076	Tee Reducing Grooved DI Gal 150 X 150 X 100mm	165.1 x 114.3	140
208077	Tee Reducing Grooved DI Gal 200 X 200 X 100mm	219.1 x 114.3	175
208078	Tee Reducing Grooved DI Gal 200 X 200 X 150mm	219.1 x 165.1	175

Fire Australia Co Pty Ltd.
ABN No. 13165523713
47 Rushdale St. Knoxfield VIC-3180. Tel:(03) 9764 0020, Fax: (03) 9764 0023.
E-mail : sales@fireausco.com.au www.fireausco.com.au

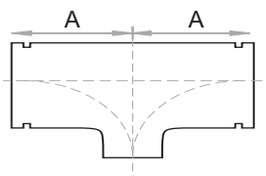

Tee 25 BSP Outlet Grooved - Gal

PART No.	DESCRIPTION	PIPE OD (mm)	SIZE "A" (mm)
208168	Tee 50mm Grooved X 25mm BSP(M) Outlet DI Gal	2x2x1BSP	832
208169	Tee 80mm Grooved X 25mm BSP(M) Outlet DI Gal	3x3x1BSP	108
208170	Tee 100mm Grooved X 25mm BSP(M) Outlet DI Gal	4x4x1BSP	127
208171	Tee 150mm Grooved X 25mm BSP(M) Outlet DI Gal	6x6x1BSP	165

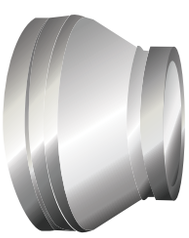

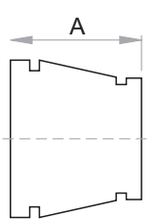

Concentric Reducer Grooved - Gal

PART No.	DESCRIPTION	PIPE OD (mm)	SIZE "A" (mm)
208047	Concentric Reducer Grooved DI Gal 65X50mm	76.1x60.3	64
208048	Concentric Reducer Grooved DI Gal 80X50mm	88.9x60.3	64
208049	Concentric Reducer Grooved DI Gal 80X65mm	88.9x76.1	64
208050	Concentric Reducer Grooved DI Gal 100X50mm	114.3x60.3	76
208051	Concentric Reducer Grooved DI Gal 100X65mm	141.3x76.1	76
208052	Concentric Reducer Grooved DI Gal 100X80mm	114.3x88.9	76
208053	Concentric Reducer Grooved DI Gal 150X50mm	165.1x60.3	102
208054	Concentric Reducer Grooved DI Gal 150X65mm	165.1x76.1	102
208055	Concentric Reducer Grooved DI Gal 150X80mm	165.1x88.9	102
208056	Concentric Reducer Grooved DI Gal 150X100mm	165.1x114.3	102
208057	Concentric Reducer Grooved DI Gal 200X80mm	219.1x88.9	127
208058	Concentric Reducer Grooved DI Gal 200X100mm	219.1x114.3	127
208059	Concentric Reducer Grooved DI Gal 200X150mm	219.1x165.1	127
208060	Concentric Reducer Grooved DI Gal 250X150mm	273x165.1	152
208061	Concentric Reducer Grooved DI Gal 250X200mm	273x219.1	152

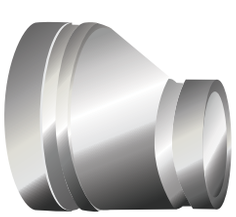

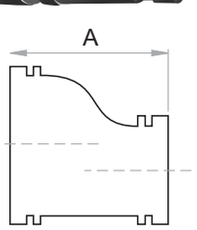

Eccentric Reducer Grooved - Gal

PART No.	DESCRIPTION	PIPE OD (mm)	SIZE "A" (mm)
208062	Eccentric Reducer Grooved DI Gal 80X50mm	88.9x60.3	89
208063	Eccentric Reducer Grooved DI Gal 100X65mm	114.3x76.1	102
208064	Eccentric Reducer Grooved DI Gal 100X80mm	114.3x88.9	102
208065	Eccentric Reducer Grooved DI Gal 150X80mm	165.1x88.9	140
208066	Eccentric Reducer Grooved DI Gal 150X100mm	165.1x114.3	140
208067	Eccentric Reducer Grooved DI Gal 200X100mm	219.1x114.3	215

Fire Australia Co Pty Ltd.
ABN No. 13165523713
47 Rushdale St. Knoxfield VIC-3180. Tel:(03) 9764 0020, Fax: (03) 9764 0023.
E-mail : sales@fireausco.com.au www.fireausco.com.au

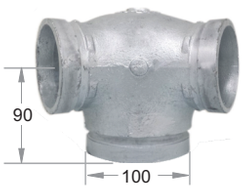

Tee Bull Head - Gal

PART No.	DESCRIPTION
208164	Tee Bull Head Grooved DI Gal 80mmX80mmX100mm

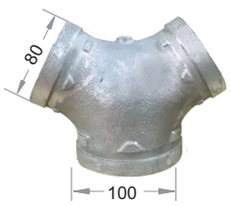

Tee-35° Offset 100mm Bottom Entry - Gal

PART No.	DESCRIPTION
208165	Tee 35° Offset Grooved DI Gal 80mmX80mmX100mm

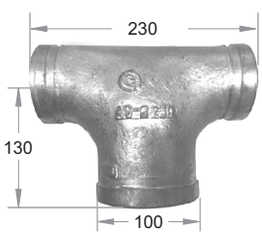

Tee Bull Head for QLD - Gal

PART No.	DESCRIPTION
208166	Bull Head Tee For QLD Grooved DI Gal 80mmX80mmX100mm

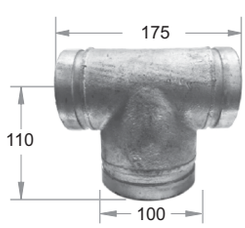

Tee Bull Head for NSW - Gal

PART No.	DESCRIPTION
208167	Bull Head Tee For NSW Grooved DI Gal 80mmX80mmX100mm

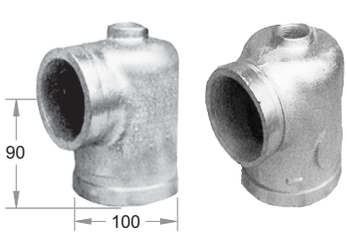

Tee End Run - Gal

PART No.	DESCRIPTION
208068	End Run Tee with 25 BSP(F) Grooved DI Gal 100mmX80mm
208069	End Run Tee Grooved DI Gal 100mmX80mm

Blank Caps - Gal

PART No.	DESCRIPTION
208094	Blank Cap Grooved DI Gal 32mm
208095	Blank Cap Grooved DI Gal 50mm
208096	Blank Cap Grooved DI Gal 65mm
208097	Blank Cap Grooved DI Gal 80mm
208098	Blank Cap Grooved DI Gal 100mm
208099	Blank Cap Grooved DI Gal 150mm
208100	Blank Cap Grooved DI Gal 200mm

Test Caps - Gal

PART No.	DESCRIPTION
208101	Test Cap 50mm Grooved with 15 BSP(F) DI Gal
208102	Test Cap 65mm Grooved with 15 BSP(F) DI Gal
208103	Test Cap 80mm Grooved with 15 BSP(F) DI Gal
208104	Test Cap 100mm Grooved with 15 BSP(F) DI Gal
208105	Test Cap 150mm Grooved with 15 BSP(F) DI Gal

Rigid Couplings Grooved - Gal

PART No.	DESCRIPTION
208001	Rigid Couplings Gal 1″
208002	Rigid Couplings Gal 1.25″
208003	Rigid Couplings Gal 1.5″
208004	Rigid Couplings Gal 2″
208005	Rigid Couplings Gal 2.5″
208006	Rigid Couplings Gal 3″
208007	Rigid Couplings Gal 4″
208008	Rigid Couplings Gal 6″
208009	Rigid Couplings Gal 8″

Roll Grooved & BSP Male Adaptors - Gal

PART No.	DESCRIPTION
208123	Adaptor 25 R/G X 25 BSP(M) DI Gal
208124	Adaptor 32 R/G X 32 BSP(M) DI Gal
208125	Adaptor 40 R/G X 40 BSP(M) DI Gal
208126	Adaptor 50 R/G X 50 BSP(M) DI Gal
208127	Adaptor 65 R/G X 65 BSP(M) DI Gal
208128	Adaptor 80 R/G X 80 BSP(M) DI Gal
208129	Adaptor 100 R/G X 100 BSP(M) DI Gal
208130	Adaptor 150 R/G X 150 BSP(M) DI Gal
208131	Adaptor 150 R/G X 125 BSP(M) DI Gal

Fire Australia Co Pty Ltd.
ABN No. 13165523713
47 Rushdale St. Knoxfield VIC-3180. Tel:(03) 9764 0020, Fax: (03) 9764 0023.
E-mail : sales@fireausco.com.au www.fireausco.com.au

FIRE AUSTRALIA CO

Tee Mechanical Grooved Outlet - Gal

PART No.	DESCRIPTION
208028	Mechanical Tee Grooved 2" X 1.25" Galvanized
208029	Mechanical Tee Grooved 2" X 1.5" Galvanized
208030	Mechanical Tee Grooved 2.5" X 1" Galvanized
208031	Mechanical Tee Grooved 2.5" X 1.25" Galvanized
208032	Mechanical Tee Grooved 2.5" X 1.5" Galvanized
208033	Mechanical Tee Grooved 3" X 1" Galvanized
208034	Mechanical Tee Grooved 3" X 1.25" Galvanized
208035	Mechanical Tee Grooved 3" X 1.5" Galvanized
208036	Mechanical Tee Grooved 3" X 2" Galvanized
208037	Mechanical Tee Grooved 4" X 1" Galvanized
208038	Mechanical Tee Grooved 4" X 1.5" Galvanized
208039	Mechanical Tee Grooved 4" X 2" Galvanized
208040	Mechanical Tee Grooved 4" X 2.5" Galvanized
208041	Mechanical Tee Grooved 4" X 3" Galvanized
208042	Mechanical Tee Grooved 6" X 1.25" Galvanized
208043	Mechanical Tee Grooved 6" X 2" Galvanized
208044	Mechanical Tee Grooved 6" X 2.5" Galvanized
208045	Mechanical Tee Grooved 6" X 3" Galvanized
208046	Mechanical Tee Grooved 6" X 4" Galvanized

Tee Mechanical Threaded Outlet - Gal

PART No.	DESCRIPTION
208010	Mechanical Tee 50mm X 25 BSP(F) Galvanized
208011	Mechanical Tee 50mm X 32 BSP(F) Galvanized
208012	Mechanical Tee 50mm X 40 BSP(F) Galvanized
208013	Mechanical Tee 65mm X 25 BSP(F) Galvanized
208014	Mechanical Tee 65mm X 32 BSP(F) Galvanized
208015	Mechanical Tee 65mm X 40 BSP(F) Galvanized
208016	Mechanical Tee 80mm X 25 BSP(F) Galvanized
208017	Mechanical Tee 80mm X 32 BSP(F) Galvanized
208018	Mechanical Tee 80mm X 40 BSP(F) Galvanized
208019	Mechanical Tee 80mm X 50 BSP(F) Galvanized
208020	Mechanical Tee 100mm X 25 BSP(F) Galvanized
208021	Mechanical Tee 100mm X 32 BSP(F) Galvanized
208022	Mechanical Tee 100mm X 40 BSP(F) Galvanized
208023	Mechanical Tee 100mm X 50 BSP(F) Galvanized
208024	Mechanical Tee 150mm X 25 BSP(F) Galvanized
208025	Mechanical Tee 150mm X 32 BSP(F) Galvanized
208026	Mechanical Tee 150mm X 40 BSP(F) Galvanized
208027	Mechanical Tee 150mm X 50 BSP(F) Galvanized

Fire Australia Co Pty Ltd.
ABN No. 13165523713
47 Rushdale St. Knoxfield VIC-3180. Tel:(03) 9764 0020, Fax: (03) 9764 0023.
E-mail : sales@fireausco.com.au www.fireausco.com.au

Couplings Rigid Roll Grooved Stainless Steel 316

PART No.	DESCRIPTION
214001	Coupling Rigid 25mm R/G Stainless Steel
214002	Coupling Rigid 32mm R/G Stainless Steel
214003	Coupling Rigid 40mm R/G Stainless Steel
214004	Coupling Rigid 50mm R/G Stainless Steel
214005	Coupling Rigid 65mm R/G Stainless Steel
214006	Coupling Rigid 80mm R/G Stainless Steel
214007	Coupling Rigid 100mm R/G Stainless Steel
214008	Coupling Rigid 150mm R/G Stainless Steel
214009	Coupling Rigid 200mm R/G Stainless Steel
214010	Coupling Rigid 250mm R/G Stainless Steel
214011	Coupling Rigid 300mm R/G Stainless Steel

Couplings Flexible Roll Grooved Stainless Steel 316

PART No.	DESCRIPTION
214012	Coupling Flexible 25mm R/G Stainless Steel
214013	Coupling Flexible 32mm R/G Stainless Steel
214014	Coupling Flexible 40mm R/G Stainless Steel
214015	Coupling Flexible 50mm R/G Stainless Steel
214016	Coupling Flexible 65mm R/G Stainless Steel
214017	Coupling Flexible 80mm R/G Stainless Steel
214018	Coupling Flexible 100mm R/G Stainless Steel
214019	Coupling Flexible 150mm R/G Stainless Steel
214020	Coupling Flexible 200mm R/G Stainless Steel
214021	Coupling Flexible 250mm R/G Stainless Steel
214022	Coupling Flexible 300mm R/G Stainless Steel

Elbow 45° Roll Grooved Stainless Steel 316

PART No.	DESCRIPTION
214023	Elbow 45° 25mm R/G Stainless Steel
214024	Elbow 45° 32mm R/G Stainless Steel
214025	Elbow 45° 40mm R/G Stainless Steel
214026	Elbow 45° 50mm R/G Stainless Steel
214027	Elbow 45° 65mm R/G Stainless Steel
214028	Elbow 45° 80mm R/G Stainless Steel
214029	Elbow 45° 100mm R/G Stainless Steel
214030	Elbow 45° 150mm R/G Stainless Steel
214031	Elbow 45° 200mm R/G Stainless Steel
214032	Elbow 45° 250mm R/G Stainless Steel
214033	Elbow 45° 300mm R/G Stainless Steel

Fire Australia Co Pty Ltd.
ABN No. 13165523713
47 Rushdale St. Knoxfield VIC-3180. Tel:(03) 9764 0020, Fax: (03) 9764 0023.
E-mail : sales@fireausco.com.au www.fireausco.com.au

FIRE AUSTRALIA CO

Elbow 90° Roll Grooved Stainless Steel 316

PART No.	DESCRIPTION
214034	Elbow 90° 25mm R/G Stainless Steel
214035	Elbow 90° 32mm R/G Stainless Steel
214036	Elbow 90° 40mm R/G Stainless Steel
214037	Elbow 90° 50mm R/G Stainless Steel
214038	Elbow 90° 65mm R/G Stainless Steel
214039	Elbow 90° 80mm R/G Stainless Steel
214040	Elbow 90° 100mm R/G Stainless Steel
214041	Elbow 90° 150mm R/G Stainless Steel
214042	Elbow 90° 200mm R/G Stainless Steel
214043	Elbow 90° 250mm R/G Stainless Steel
214044	Elbow 90° 300mm R/G Stainless Steel

Tee Equal Roll Grooved Stainless Steel 316

PART No.	DESCRIPTION
214045	Equal Tee 25mm R/G Stainless Steel
214046	Equal Tee 32mm R/G Stainless Steel
214047	Equal Tee 40mm R/G Stainless Steel
214048	Equal Tee 50mm R/G Stainless Steel
214049	Equal Tee 65mm R/G Stainless Steel
214050	Equal Tee 80mm R/G Stainless Steel
214051	Equal Tee 100mm R/G Stainless Steel
214052	Equal Tee 150mm R/G Stainless Steel
214053	Equal Tee 200mm R/G Stainless Steel
214054	Equal Tee 250mm R/G Stainless Steel
214055	Equal Tee 300mm R/G Stainless Steel

Tee Reducing Roll Grooved Stainless Steel 316

PART No.	DESCRIPTION
214056	Reducing Tee 40mm X 25mm R/G Stainless Steel
214057	Reducing Tee 40mm X 32mm R/G Stainless Steel
214058	Reducing Tee 50mm X 25mm R/G Stainless Steel
214059	Reducing Tee 50mm X 32mm R/G Stainless Steel
214060	Reducing Tee 50mm X 40mm R/G Stainless Steel
214061	Reducing Tee 65mm X 25mm R/G Stainless Steel
214062	Reducing Tee 65mm X 32mm R/G Stainless Steel
214063	Reducing Tee 65mm X 40mm R/G Stainless Steel
214064	Reducing Tee 65mm X 50mm R/G Stainless Steel
214065	Reducing Tee 80mm X 32mm R/G Stainless Steel
214066	Reducing Tee 80mm` X 40mm R/G Stainless Steel
214067	Reducing Tee 80mm X 50mm R/G Stainless Steel
214068	Reducing Tee 80mm X 65mm R/G Stainless Steel
214069	Reducing Tee 100mm X 50mm R/G Stainless Steel
214070	Reducing Tee 100mm X 65mm R/G Stainless Steel
214071	Reducing Tee 100mm X 80mm R/G Stainless Steel
214072	Reducing Tee 150mm X 80mm R/G Stainless Steel
214073	Reducing Tee 150mm X 100mm R/G Stainless Steel
214074	Reducing Tee 200mm X 100mm R/G Stainless Steel
214075	Reducing Tee 200mm X 150mm R/G Stainless Steel
214076	Reducing Tee 250mm X 150mm R/G Stainless Steel
214077	Reducing Tee 250mm X 200mm R/G Stainless Steel
214078	Reducing Tee 300mm X 200mm R/G Stainless Steel
214079	Reducing Tee 300mm X 250mm R/G Stainless Steel

Fire Australia Co Pty Ltd.
ABN No. 13165523713
47 Rushdale St. Knoxfield VIC-3180. Tel:(03) 9764 0020, Fax: (03) 9764 0023.
E-mail : sales@fireausco.com.au www.fireausco.com.au

Reducer Concentric Roll Grooved Stainless Steel 316

PART No.	DESCRIPTION							
214080	Concentric	Reducer	40mm	X	25mm	R/G	Stainless	Steel
214081	Concentric	Reducer	40mm	X	32mm	R/G	Stainless	Steel
214082	Concentric	Reducer	50mm	X	25mm	R/G	Stainless	Steel
214083	Concentric	Reducer	50mm	X	32mm	R/G	Stainless	Steel
214084	Concentric	Reducer	50mm	X	40mm	R/G	Stainless	Steel
214085	Concentric	Reducer	65mm	X	25mm	R/G	Stainless	Steel
214086	Concentric	Reducer	65mm	X	32mm	R/G	Stainless	Steel
214087	Concentric	Reducer	65mm	X	40mm	R/G	Stainless	Steel
214088	Concentric	Reducer	65mm	X	50mm	R/G	Stainless	Steel
214089	Concentric	Reducer	80mm	X	32mm	R/G	Stainless	Steel
214090	Concentric	Reducer	80mm	X	40mm	R/G	Stainless	Steel
214091	Concentric	Reducer	80mm	X	50mm	R/G	Stainless	Steel
214092	Concentric	Reducer	80mm	X	65mm	R/G	Stainless	Steel
214093	Concentric	Reducer	100mm	X	50mm	R/G	Stainless	Steel
214094	Concentric	Reducer	100mm	X	65mm	R/G	Stainless	Steel
214095	Concentric	Reducer	100mm	X	80mm	R/G	Stainless	Steel
214096	Concentric	Reducer	150mm	X	80mm	R/G	Stainless	Steel
214097	Concentric	Reducer	150mm	X	100mm	R/G	Stainless	Steel
214098	Concentric	Reducer	200mm	X	100mm	R/G	Stainless	Steel
214099	Concentric	Reducer	200mm	X	150mm	R/G	Stainless	Steel
214100	Concentric	Reducer	250mm	X	150mm	R/G	Stainless	Steel
214101	Concentric	Reducer	250mm	X	200mm	R/G	Stainless	Steel
214102	Concentric	Reducer	300mm	X	200mm	R/G	Stainless	Steel
214103	Concentric	Reducer	300mm	X	250mm	R/G	Stainless	Steel

Flange Adaptor Roll Grooved Stainless Steel 316

PART No.	DESCRIPTION							
214104	Flange	Adaptor	50mm	Table	D	R/G	Stainless	Steel
214105	Flange	Adaptor	65mm	Table	D	R/G	Stainless	Steel
214106	Flange	Adaptor	80mm	Table	D	R/G	Stainless	Steel
214107	Flange	Adaptor	100mm	Table	D/E	R/G	Stainless	Steel
214108	Flange	Adaptor	150mm	Table	D/E	R/G	Stainless	Steel
214109	Flange	Adaptor	200mm	Table	D/E	R/G	Stainless	Steel

Fire Australia Co Pty Ltd.
ABN No. 13165523713
47 Rushdale St. Knoxfield VIC-3180. Tel:(03) 9764 0020, Fax: (03) 9764 0023.
E-mail : sales@fireausco.com.au www.fireausco.com.au

End Cap Roll Grooved Stainless Steel 316

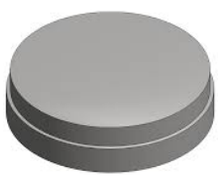

PART No.	DESCRIPTION
214110	End Cap 25mm R/G Stainless Steel
214111	End Cap 32mm R/G Stainless Steel
214112	End Cap 40mm R/G Stainless Steel
214113	End Cap 50mm R/G Stainless Steel
214114	End Cap 65mm R/G Stainless Steel
214115	End Cap 80mm R/G Stainless Steel
214116	End Cap 100mm R/G Stainless Steel
214117	End Cap 150mm R/G Stainless Steel
214118	End Cap 200mm R/G Stainless Steel
214119	End Cap 250mm R/G Stainless Steel
214120	End Cap 300mm R/G Stainless Steel

Adaptor Roll Grooved X BSP Stainless Steel 316

PART No.	DESCRIPTION
214121	Adaptor 25mm R/G X BSP Stainless Steel
214122	Adaptor 32mm R/G X BSP Stainless Steel
214123	Adaptor 40mm R/G X BSP Stainless Steel
214124	Adaptor 50mm R/G X BSP Stainless Steel
214125	Adaptor 65mm R/G X BSP Stainless Steel
214126	Adaptor 80mm R/G X BSP Stainless Steel
214127	Adaptor 100mm R/G X BSP Stainless Steel

Eccentric Reducers Flanged Table E - Galvanized

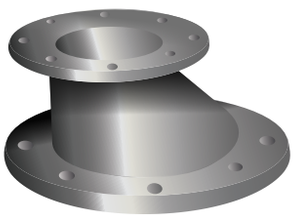

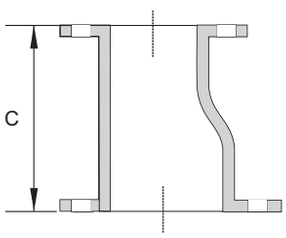

PART No.	DESCRIPTION	"C"
209001	Eccentric Table E Flanged Reducer 50mm X 40mm Galvanized	76.2
209002	Eccentric Table E Flanged Reducer 65mm X 40mm Galvanized	88.9
209003	Eccentric Table E Flanged Reducer 65mm X 50mm Galvanized	88.9
209004	Eccentric Table E Flanged Reducer 80mm X 50mm Galvanized	88.9
209005	Eccentric Table E Flanged Reducer 80mm X 65mm Galvanized	88.9
209006	Eccentric Table E Flanged Reducer 100mm X 50mm Galvanized	101.6
209007	Eccentric Table E Flanged Reducer 100mm X 65mm Galvanized	101.6
209008	Eccentric Table E Flanged Reducer 100mm X 80mm Galvanized	101.6
209009	Eccentric Table E Flanged Reducer 125mm X 100mm Galvanized	127
209010	Eccentric Table E Flanged Reducer 150mm X 80mm Galvanized	139.7
209011	Eccentric Table E Flanged Reducer 150mm X 100mm Galvanized	139.7
209012	Eccentric Table E Flanged Reducer 150mm X 125mm Galvanized	139.7
209013	Eccentric Table E Flanged Reducer 200mm X 100mm Galvanized	152.4
209014	Eccentric Table E Flanged Reducer 200mm X 125mm Galvanized	152.4
209015	Eccentric Table E Flanged Reducer 200mm X 150mm Galvanized	152.4
209016	Eccentric Table E Flanged Reducer 250mm X 150mm Galvanized	177.8
209017	Eccentric Table E Flanged Reducer 250mm X 200mm Galvanized	177.8
209018	Eccentric Table E Flanged Reducer 200mm X 200mm Galvanized	203.2
209019	Eccentric Table E Flanged Reducer 300mm X 250mm Galvanized	203.2

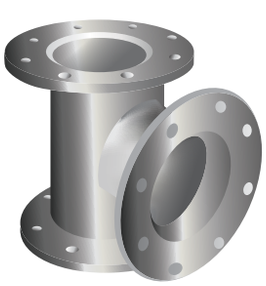

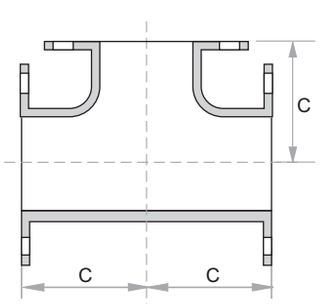

Tees Flanged Table E -Galvanized

PART No.	DESCRIPTION	"C"
209020	Flanged Tee 80mm Table E Galvanized	85.9
209021	Flanged Tee 100mm Table E Galvanized	104.6
209022	Flanged Tee 125mm Table E Galvanized	124
209023	Flanged Tee 150mm Table E Galvanized	142.7
209024	Flanged Tee 200mm Table E Galvanized	177.8

Fire Australia Co Pty Ltd.
ABN No. 13165523713
47 Rushdale St. Knoxfield VIC-3180. Tel:(03) 9764 0020, Fax: (03) 9764 0023.
E-mail : sales@fireausco.com.au www.fireausco.com.au

FIRE AUSTRALIA CO

Concentric Reducers Flanged Table E - Galvanized

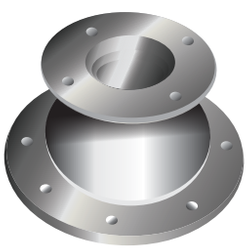

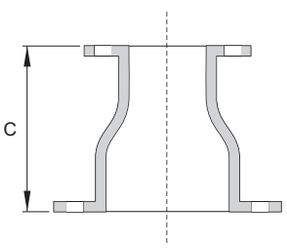

PART No.	DESCRIPTION	"C"
209025	Concentric Table E Flanged Reducer 50mm X 32mm Galvanized	76.2
209026	Concentric Table E Flanged Reducer 50mm X 40mm Galvanized	76.2
209027	Concentric Table E Flanged Reducer 65mm X 40mm Galvanized	88.9
209028	Concentric Table E Flanged Reducer 65mm X 50mm Galvanized	88.9
209029	Concentric Table E Flanged Reducer 80mm X 25mm Galvanized	88.9
209030	Concentric Table E Flanged Reducer 80mm X 40mm Galvanized	88.9
209031	Concentric Table E Flanged Reducer 80mm X 50mm Galvanized	88.9
209032	Concentric Table E Flanged Reducer 80mm X 65mm Galvanized	88.9
209033	Concentric Table E Flanged Reducer 100mm X 50mm Galvanized	101.6
209034	Concentric Table E Flanged Reducer 100mm X 65mm Galvanized	101.6
209035	Concentric Table E Flanged Reducer 100mm X 80mm Galvanized	101.6
209036	Concentric Table E Flanged Reducer 125mm X 80mm Galvanized	127
209037	Concentric Table E Flanged Reducer 125mm X 100mm Galvanized	127
209038	Concentric Table E Flanged Reducer 150mm X 65mm Galvanized	139.7
209039	Concentric Table E Flanged Reducer 150mm X 80mm Galvanized	139.7
209040	Concentric Table E Flanged Reducer 150mm X 100mm Galvanized	139.7
209041	Concentric Table E Flanged Reducer 150mm X 125mm Galvanized	139.7
209042	Concentric Table E Flanged Reducer 200mm X 100mm Galvanized	152.4
209043	Concentric Table E Flanged Reducer 200mm X 125mm Galvanized	152.4
209044	Concentric Table E Flanged Reducer 200mm X 150mm Galvanized	152.4
209045	Concentric Table E Flanged Reducer 250mm X 150mm Galvanized	177.8
209046	Concentric Table E Flanged Reducer 250mm X 200mm Galvanized	177.8
209047	Concentric Table E Flanged Reducer 300mm X 150mm Galvanized	203.2
209048	Concentric Table E Flanged Reducer 300mm X 200mm Galvanized	203.2
209049	Concentric Table E Flanged Reducer 300mm X 250mm Galvanized	203.2

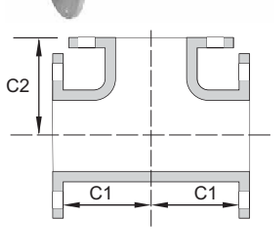

Tees - Reducing Flanged Table E - Galvanized

PART No.	DESCRIPTION	"C-1"	"C-2"
209050	Reducing Tee Table E Flanged 80mm X 50mm Galvanized	85.9	82.6
209051	Reducing Tee Table E Flanged 100mm X 80mm Galvanized	104.6	98.6
209052	Reducing Tee Table E Flanged 150mm X 100mm Galvanized	142.7	130
209053	Reducing Tee Table E Flanged 200mm X 150mm Galvanized	177.8	168.1

Fire Australia Co Pty Ltd.
ABN No. 13165523713
47 Rushdale St. Knoxfield VIC-3180. Tel:(03) 9764 0020, Fax: (03) 9764 0023.
E-mail : sales@fireausco.com.au www.fireausco.com.au

Elbows 90 Deg. Fixed Flanged Table E SGP - Galvanized

PART NO.	DESCRIPTION	"C"
209054	Elbow 90° Fixed 80mm Table E Flanged SGP Galvanized	114.3
209055	Elbow 90° Fixed 100mm Table E Flanged SGP Galvanized	152.4
209056	Elbow 90° Fixed 125mm Table E Flanged SGP Galvanized	190.5
209057	Elbow 90° Fixed 150mm Table E Flanged SGP Galvanized	228.6
209058	Elbow 90° Fixed 200mm Table E Flanged SGP Galvanized	304.8

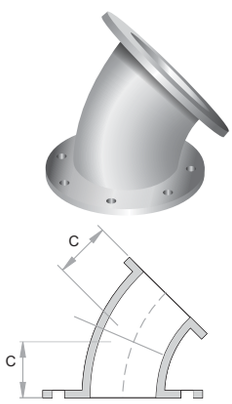

Elbows 45 Deg. Fixed Flanged Table E SGP - Galvanized

PART NO.	DESCRIPTION	"C"
209059	Elbow 45° Fixed 80mm Table E Flanged SGP Galvanized	47.3
209060	Elbow 45° Fixed 100mm Table E Flanged SGP Galvanized	63.5
209061	Elbow 45° Fixed 125mm Table E Flanged SGP Galvanized	78.9
209062	Elbow 45° Fixed 150mm Table E Flanged SGP Galvanized	94.7
209063	Elbow 45° Fixed 200mm Table E Flanged SGP Galvanized	126.3

Elbows 90 Deg. Loose Flanged Table E SGP - Galvanized

PART NO.	DESCRIPTION	"C"
209064	Elbow 90° Loose 80mm Table E Flanged SGP Galvanized	114.3
209065	Elbow 90° Loose 100mm Table E Flanged SGP Galvanized	152.4
209066	Elbow 90° Loose 125mm Table E Flanged SGP Galvanized	190.5
209067	Elbow 90° Loose 150mm Table E Flanged SGP Galvanized	228.6
209068	Elbow 90° Loose 200mm Table E Flanged SGP Galvanized	304.8

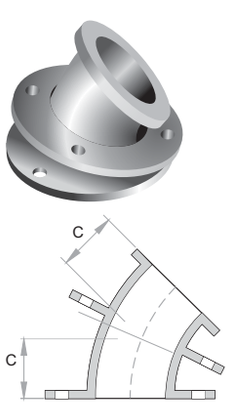

Elbows 45 Deg. Loose Flanged Table E SGP - Galvanized

PART NO.	DESCRIPTION	"C"
209069	Elbow 45° Loose 80mm Table E Flanged SGP Galvanized	47.3
209070	Elbow 45° Loose 100mm Table E Flanged SGP Galvanized	63.1
209071	Elbow 45° Loose 125mm Table E Flanged SGP Galvanized	78.9
209072	Elbow 45° Loose 150mm Table E Flanged SGP Galvanized	94.7
209073	Elbow 45° Loose 200mm Table E Flanged SGP Galvanized	126.3

Fire Australia Co Pty Ltd.
ABN No. 13165523713
47 Rushdale St. Knoxfield VIC-3180. Tel:(03) 9764 0020, Fax: (03) 9764 0023.
E-mail : sales@fireausco.com.au www.fireausco.com.au

FIRE AUSTRALIA CO

Elbows 90 Deg. - Reducing Loose Flanged Table E - Galvanized

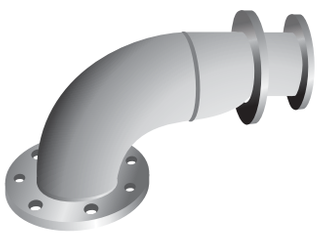

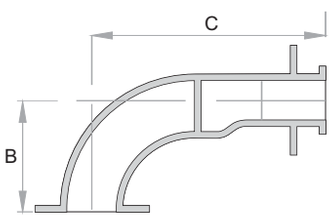

PART No.	DESCRIPTION	"B"	"C"
209074	Elbow 90° Reducing 80mm X 40mm Table E Loose Flanged Gal	124.5	241.5
209075	Elbow 90° Reducing 80mm X 50mm Table E Loose Flanged Gal	127.4	248.3
209076	Elbow 90° Reducing 80mm X 65mm Table E Loose Flanged Gal	130	254.9
209077	Elbow 90° Reducing 100mm X50mm Table E Loose Flanged Gal	165.5	299
209078	Elbow 90° Reducing 100mm X 65mm Table E Loose Flanged Gal	168.1	305.8
209079	Elbow 90° Reducing 100mm X 80mm Table E Loose Flanged Gal	171.9	310.3
209080	Elbow 90° Reducing 125mm X 80mm Table E Loose Flanged Gal	210	373.3
209081	Elbow 90° Reducing 125mm X 100mm Table E Loose Flanged Gal	216.1	382.3
209082	Elbow 90° Reducing 150mm X 65mm Table E Loose Flanged Gal	244.3	420.5
209083	Elbow 90° Reducing 150mm X 800mm Table E Loose Flanged Gal	248.1	424.6
209084	Elbow 90° Reducing 150mm X 100mm Table E Loose Flanged Gal	254.2	433.6
209085	Elbow 90° Reducing 150mm X 125mm Table E Loose Flanged Gal	260.6	440.3
209086	Elbow 90° Reducing 200mm X 100mm Table E Loose Flanged Gal	330.4	522.5
209087	Elbow 90° Reducing 200mm X 125mm Table E Loose Flanged Gal	336.8	529.2
209088	Elbow 90° Reducing 200mm X 150m Table E Loose Flanged Gal	343.3	529.2

Elbows 90 Deg. Gooseneck Flanged Table E

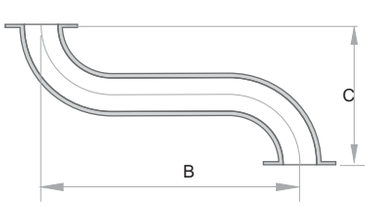

PART No.	DESCRIPTION	"B"	"C"
209089	Gooseneck 90° Fixed 80mm Table E Flanged Galvanized	600	228.6
209090	Gooseneck 90° Fixed 100mm Table E Flanged Galvanized	750	304.8
209091	Gooseneck 90° Fixed 125mm Table E Flanged Galvanized	900	381
209092	Gooseneck 90° Fixed 150mm Table E Flanged Galvanized	900	456
209093	Gooseneck 90° Fixed 200mm Table E Flanged Galvanized	900	609.6

Elbows 45 Deg. Gooseneck Flanged Table E

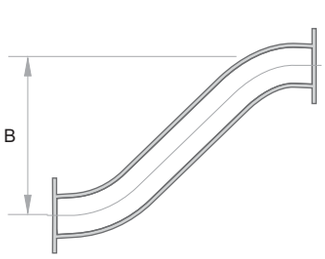

PART No.	DESCRIPTION	"B"
209094	Gooseneck 45° Fixed 80mm Table E Flanged Galvanized	600
209095	Gooseneck 45° Fixed 100mm Table E Flanged Galvanized	750
209096	Gooseneck 45° Fixed 125mm Table E Flanged Galvanized	900
209097	Gooseneck 45° Fixed 150mm Table E Flanged Galvanized	900
209098	Gooseneck 45° Fixed 200mm Table E Flanged Galvanized	900

Fire Australia Co Pty Ltd.
ABN No. 13165523713
47 Rushdale St. Knoxfield VIC-3180. Tel:(03) 9764 0020, Fax: (03) 9764 0023.
E-mail : sales@fireausco.com.au www.fireausco.com.au

Pipe Spool Pieces - Flanged Table E - Galvanized

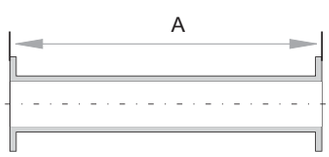

PART No.	DESCRIPTION	A
209099	Pipe Spool Piece Flanged Table E 80mm X 900mm OAL Gal	900
209100	Pipe Spool Piece Flanged Table E 80mm X 1800mm OAL Gal	1800
209101	Pipe Spool Piece Flanged Table E 80mm X 2700mm OAL Gal	2700
209102	Pipe Spool Piece Flanged Table E 80mm X 3600mm OAL Gal	3600
209103	Pipe Spool Piece Flanged Table E 80mm X 4500mm OAL Gal	4500
209104	Pipe Spool Piece Flanged Table E 80mm X 5500mm OAL Gal	5500
209105	Pipe Spool Piece Flanged Table E 100mm X 900mm OAL Gal	900
209106	Pipe Spool Piece Flanged Table E 100mm X 1800mm OAL Gal	1800
209107	Pipe Spool Piece Flanged Table E 100mm X 2700mm OAL Gal	2700
209108	Pipe Spool Piece Flanged Table E 100mm X 3600mm OAL Gal	3600
209109	Pipe Spool Piece Flanged Table E 100mm X 4500mm OAL Gal	4500
209110	Pipe Spool Piece Flanged Table E 100mm X 5500mm OAL Gal	5500
209111	Pipe Spool Piece Flanged Table E 125mm X 900mm OAL Gal	900
209112	Pipe Spool Piece Flanged Table E 125mm X 1800mm OAL Gal	1800
209113	Pipe Spool Piece Flanged Table E 125mm X 2700mm OAL Gal	2700
209114	Pipe Spool Piece Flanged Table E 125mm X 3600mm OAL Gal	3600
209115	Pipe Spool Piece Flanged Table E 125mm X 4500mm OAL Gal	4500
209116	Pipe Spool Piece Flanged Table E 125mm X 5500mm OAL Gal	5500
209117	Pipe Spool Piece Flanged Table E 150mm X 900mm OAL Gal	900
209118	Pipe Spool Piece Flanged Table E 150mm X 1800mm OAL Gal	1800
209119	Pipe Spool Piece Flanged Table E 150mm X 2700mm OAL Gal	2700
209120	Pipe Spool Piece Flanged Table E 150mm X 3600mm OAL Gal	3600
209121	Pipe Spool Piece Flanged Table E 150mm X 4500mm OAL Gal	4500
209122	Pipe Spool Piece Flanged Table E 150mm X 5500mm OAL Gal	5500
209123	Pipe Spool Piece Flanged Table E 200mm X 900mm OAL Gal	900
209124	Pipe Spool Piece Flanged Table E 200mm X 1800mm OAL Gal	1800
209125	Pipe Spool Piece Flanged Table E 200mm X 2700mm OAL Gal	2700
209126	Pipe Spool Piece Flanged Table E 200mm X 3600mm OAL Gal	3600
209127	Pipe Spool Piece Flanged Table E 200mm X 4500mm OAL Gal	4500
209128	Pipe Spool Piece Flanged Table E 200mm X 5500mm OAL Gal	5500

Fire Australia Co Pty Ltd.
ABN No. 13165523713
47 Rushdale St. Knoxfield VIC-3180. Tel:(03) 9764 0020, Fax: (03) 9764 0023.
E-mail : sales@fireausco.com.au www.fireausco.com.au

Foot Valve Hot Dipped Galvanised

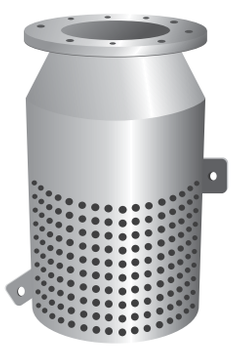

PART No.	DESCRIPTION
209170	Footvalve 80mm Table D Flanged Galvanized
209171	Footvalve 100mm Table D Flanged Galvanized
209172	Footvalve 125mm Table E Flanged Galvanized
209173	Footvalve 150mm Table E Flanged Galvanized
209174	Footvalve 200mm Table E Flanged Galvanized
209175	Footvalve 250mm Table E Flanged Galvanized
209176	Footvalve 300mm Table E Flanged Galvanized

Footvalve Stainless Steel Grade 304

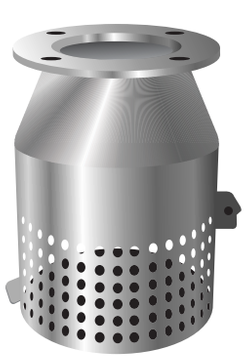

PART No.	DESCRIPTION
209177	Footvalve 80mm Table D Flanged Stainless Steel
209178	Footvalve 100mm Table D Flanged Stainless Steel
209179	Footvalve 125mm Table E Flanged Stainless Steel
209180	Footvalve 150mm Table E Flanged Stainless Steel
209181	Footvalve 200mm Table E Flanged Stainless Steel
209182	Footvalve 250mm Table E Flanged Stainless Steel
209183	Footvalve 300mm Table E Flanged Stainless Steel

D.I Flanged Hose Tails-Ribbed Type

PART No.	DESCRIPTION
208989	Flange Hose Tail Ribbed 80mm Table D/E Ductile Iron
208990	Flange Hose Tail Ribbed 100mm Table D/E Ductile Iron
208991	Flange Hose Tail Ribbed 150mm Table D/E Ductile Iron

Roll Grooved X BSP Male Adaptors Galvanized

PART No.	DESCRIPTION
208639	Adaptor 25mm R/G X 25mm BSP Male
208640	Adaptor 32mm R/G X 32mm BSP Male
208641	Adaptor 38mm R/G X 38mm BSP Male
208642	Adaptor 50mm R/G X 50mm BSP Male
208643	Adaptor 65mm R/G X 65mm BSP Male
208644	Adaptor 80mm R/G X 80mm BSP Male
208645	Adaptor 100mm R/G X 100mm BSP Male
208646	Adaptor 100mm R/G X 125mm BSP Male
208647	Adaptor 150mm R/G X 125mm BSP Male
208648	Adaptor 150mm R/G X 150mm BSP Male

Galvanized Fabricated Adaptors BSP X BSP

PART No.	DESCRIPTION
208651	Fabricated Adaptor 125 BSP Male X 100 BSP Male Galvanized

Forged Adaptors R/G X BSP

PART No.	DESCRIPTION
208649	Adaptor 50 X 50 R/G X BSP Male Brass Forged
208650	Adaptor 65 X 65 R/G X BSP Male Brass Forged
208660	Adaptor 50 X 50 R/G X BSP Male Aluminium Forged
208661	Adaptor 65 X 65 R/G X BSP Male Aluminium Forged

Fire Australia Co Pty Ltd.
ABN No. 13165523713
47 Rushdale St. Knoxfield VIC-3180. Tel:(03) 9764 0020, Fax: (03) 9764 0023.
E-mail : sales@fireausco.com.au www.fireausco.com.au

FIRE AUSTRALIA CO

Bushes - Hexagon Gal Mal Iron BSP

PART No.	DESCRIPTION				
141000	8mm(1/4)	X	6mm(1/8)	Gal	Bush
141001	10mm	X	6mm(1/8)	Gal	Bush
141002	10mm	X	8mm(1/4)	Gal	Bush
141003	15mm	X	10mm	Gal	Bush
141004	15mm	X	6mm(1/8)	Gal	Bush
141005	15mm	X	8mm(1/4)	Gal	Bush
141006	20mm	X	8mm	Gal	Bush
141007	20mm	X	10mm	Gal	Bush
141008	20mm	X	15mm	Gal	Bush
141009	25mm	X	8mm(1/4)	Gal	Bush
141010	25mm	X	10mm	Gal	Bush
141011	25mm	X	15mm	Gal	Bush
141012	25mm	X	20mm	Gal	Bush
141013	32mm	X	10mm	Gal	Bush
141014	32mm	X	15mm	Gal	Bush
141015	32mm	X	20mm	Gal	Bush
141016	32mm	X	25mm	Gal	Bush
141017	40mm	X	15mm	Gal	Bush
141018	40mm	X	20mm	Gal	Bush
141019	40mm	X	25mm	Gal	Bush
141020	40mm	X	32mm	Gal	Bush
141021	50mm	X	15mm	Gal	Bush
141022	50mm	X	20mm	Gal	Bush
141023	50mm	X	25mm	Gal	Bush
141024	50mm	X	32mm	Gal	Bush
141025	50mm	X	40mm	Gal	Bush
141026	65mm	X	20mm	Gal	Bush
141027	65mm	X	25mm	Gal	Bush
141028	65mm	X	32mm	Gal	Bush
141029	65mm	X	40mm	Gal	Bush
141030	65mm	X	50mm	Gal	Bush
141031	80mm	X	25mm	Gal	Bush
141032	80mm	X	32mm	Gal	Bush
141033	80mm	X	40mm	Gal	Bush
141034	80mm	X	50mm	Gal	Bush
141035	80mm	X	65mm	Gal	Bush
141036	100mm	X	40mm	Gal	Bush
141037	100mm	X	50mm	Gal	Bush
141038	100mm	X	65mm	Gal	Bush
141039	100mm	X	80mm	Gal	Bush
141040	150mm	X	65mm	Gal	Bush
141041	150mm	X	80mm	Gal	Bush
141042	150mm	X	100mm	Gal	Bush

Fire Australia Co Pty Ltd.
ABN No. 13165523713
47 Rushdale St. Knoxfield VIC-3180. Tel:(03) 9764 0020, Fax: (03) 9764 0023.
E-mail : sales@fireausco.com.au www.fireausco.com.au

Bends 90 Deg Female X Female Gal Mal Iron BSP

PART No.	DESCRIPTION
141054	10mm Gal Mal Bend F/F 90 Deg
141055	15mm Gal Mal Bend F/F 90 Deg
141056	20mm Gal Mal Bend F/F 90 Deg
141057	25mm Gal Mal Bend F/F 90 Deg
141058	32mm Gal Mal Bend F/F 90 Deg
141059	40mm Gal Mal Bend F/F 90 Deg
141060	50mm Gal Mal Bend F/F 90 Deg
141061	65mm Gal Mal Bend F/F 90 Deg
141062	80mm Gal Mal Bend F/F 90 Deg
141063	100mm Gal Mal Bend F/F 90 Deg

Bends 90 Deg Male X Male Gal Mal Iron BSP

PART No.	DESCRIPTION
141213	15mm Gal Mal Bend M/M 90 Deg
141214	20mm Gal Mal Bend M/M 90 Deg
141215	25mm Gal Mal Bend M/M 90 Deg
141216	32mm Gal Mal Bend M/M 90 Deg
141217	40mm Gal Mal Bend M/M 90 Deg
141218	50mm Gal Mal Bend M/M 90 Deg

Bends 90 Deg Male X Female Gal Mal Iron BSP

PART No.	DESCRIPTION
141043	8mm(1/4) Gal Mal Bend M/F 90 Deg
141044	10mm Gal Mal Bend M/F 90 Deg
141045	15mm Gal Mal Bend M/F 90 Deg
141046	20mm Gal Mal Bend M/F 90 Deg
141047	25mm Gal Mal Bend M/F 90 Deg
141048	32mm Gal Mal Bend M/F 90 Deg
141049	40mm Gal Mal Bend M/F 90 Deg
141050	50mm Gal Mal Bend M/F 90 Deg
141051	65mm Gal Mal Bend M/F 90 Deg
141052	80mm Gal Mal Bend M/F 90 Deg
141053	100mm Gal Mal Bend M/F 90 Deg

Fire Australia Co Pty Ltd.
ABN No. 13165523713
47 Rushdale St. Knoxfield VIC-3180. Tel:(03) 9764 0020, Fax: (03) 9764 0023.
E-mail : sales@fireausco.com.au www.fireausco.com.au

FIRE AUSTRALIA CO

Bends 45 Deg Male X Female Gal Mal Iron BSP

PART No.	DESCRIPTION
141207	15mm Gal Mal Bend M/F 45 Deg
141208	20mm Gal Mal Bend M/F 45 Deg
141209	25mm Gal Mal Bend M/F 45 Deg
141210	32mm Gal Mal Bend M/F 45 Deg
141211	40mm Gal Mal Bend M/F 45 Deg
141212	50mm Gal Mal Bend M/F 45 Deg

Elbows 45 Deg Male X Female Gal Mal Iron BSP

PART No.	DESCRIPTION
141246	15mm Gal Mal Elbow M/F 45 Deg
141247	20mm Gal Mal Elbow M/F 45 Deg
141248	25mm Gal Mal Elbow M/F 45 Deg
141249	32mm Gal Mal Elbow M/F 45 Deg
141250	40mm Gal Mal Elbow M/F 45 Deg
141251	50mm Gal Mal Elbow M/F 45 Deg

Elbows 90 Deg Female X Female Gal Mal Iron BSP

PART No.	DESCRIPTION
141067	8mm(1/4) Gal Mal Elbow F/F 90 Deg
141068	10mm Gal Mal Elbow F/F 90 Deg
141069	15mm Gal Mal Elbow F/F 90 Deg
141070	20mm Gal Mal Elbow F/F 90 Deg
141071	25mm Gal Mal Elbow F/F 90 Deg
141072	32mm Gal Mal Elbow F/F 90 Deg
141073	40mm Gal Mal Elbow F/F 90 Deg
141074	50mm Gal Mal Elbow F/F 90 Deg
141075	65mm Gal Mal Elbow F/F 90 Deg
141076	80mm Gal Mal Elbow F/F 90 Deg
141077	100mm Gal Mal Elbow F/F 90 Deg
141078	150mm Gal Mal Elbow F/F 90 Deg

Elbows 90 Deg Male X Female Gal Mal Iron BSP

PART No.	DESCRIPTION
141079	8mm(1/4) Gal Mal Elbow M/F 90 Deg
141080	10mm Gal Mal Elbow M/F 90 Deg
141081	15mm Gal Mal Elbow M/F 90 Deg
141082	20mm Gal Mal Elbow M/F 90 Deg
141083	25mm Gal Mal Elbow M/F 90 Deg
141084	32mm Gal Mal Elbow M/F 90 Deg
141085	40mm Gal Mal Elbow M/F 90 Deg
141086	50mm Gal Mal Elbow M/F 90 Deg
141087	65mm Gal Mal Elbow M/F 90 Deg
141088	80mm Gal Mal Elbow M/F 90 Deg
141089	100mm Gal Mal Elbow M/F 90 Deg

Fire Australia Co Pty Ltd.
ABN No. 13165523713
47 Rushdale St. Knoxfield VIC-3180. Tel:(03) 9764 0020, Fax: (03) 9764 0023.
E-mail : sales@fireausco.com.au www.fireausco.com.au

Reducing Elbows - Female X Female 90 Deg Gal Mal Iron BSP

PART No.	DESCRIPTION
141090	20mm X 15mm Gal Mal Elbow F/F 90 Reducing
141091	25mm X 20mm Gal Mal Elbow F/F 90 Reducing
141092	32mm X 20mm Gal Mal Elbow F/F 90 Reducing
141093	32mm X 25mm Gal Mal Elbow F/F 90 Reducing
141094	40mm X 25mm Gal Mal Elbow F/F 90 Reducing
141095	40mm X 32mm Gal Mal Elbow F/F 90 Reducing
141096	50mm X 25mm Gal Mal Elbow F/F 90 Reducing
141097	50mm X 40mm Gal Mal Elbow F/F 90 Reducing

Caps Gal Mal Iron BSP

PART No.	DESCRIPTION
141098	15mm Gal Mal Cap
141099	20mm Gal Mal Cap
141100	25mm Gal Mal Cap
141101	32mm Gal Mal Cap
141102	40mm Gal Mal Cap
141103	50mm Gal Mal Cap
141104	65mm Gal Mal Cap
141105	80mm Gal Mal Cap
141106	100mm Gal Mal Cap
141107	150mm Gal Mal Cap

Nipples - Hexagon Gal Mal Iron BSP

PART No.	DESCRIPTION
141108	6mm(1/8) Gal Mal Hex Nipple
141109	8mm(1/4) Gal Mal Hex Nipple
141110	10mm(3/8) Gal Mal Hex Nipple
141111	15mm Gal Mal Hex Nipple
141112	20mm Gal Mal Hex Nipple
141113	25mm Gal Mal Hex Nipple
141114	32mm Gal Mal Hex Nipple
141115	40mm Gal Mal Hex Nipple
141116	50mm Gal Mal Hex Nipple
141117	65mm Gal Mal Hex Nipple
141118	80mm Gal Mal Hex Nipple
141119	100mm Gal Mal Hex Nipple
141120	150mm Gal Mal Hex Nipple

Fire Australia Co Pty Ltd.
ABN No. 13165523713
47 Rushdale St. Knoxfield VIC-3180. Tel:(03) 9764 0020, Fax: (03) 9764 0023.
E-mail : sales@fireausco.com.au www.fireausco.com.au

FIRE AUSTRALIA CO

Nipples - Hexagon Reducing Gal Mal Iron BSP

PART No.	DESCRIPTION
141186	15mm X 8mm(1/4) Gal Mal Hex Nipple Reducing
141187	15mm 10mm(3/8) Gal Mal Hex Nipple Reducing
141188	20mm X 10mm(3/8) Gal Mal Hex Nipple Reducing
141189	20mm X 15mm Gal Mal Hex Nipple Reducing
141190	25mm X 15mm Gal Mal Hex Nipple Reducing
141191	25mm X 20mm Gal Mal Hex Nipple Reducing
141192	32mm X 15mm Gal Mal Hex Nipple Reducing
141193	32mm X 20mm Gal Mal Hex Nipple Reducing
141194	32mm X 25mm Gal Mal Hex Nipple Reducing
141195	40mm X 25mm Gal Mal Hex Nipple Reducing
141196	40mm X 32mm Gal Mal Hex Nipple Reducing
141197	50mm X 25mm Gal Mal Hex Nipple Reducing
141198	50mm X 32mm Gal Mal Hex Nipple Reducing
141199	50mm X 40mm Gal Mal Hex Nipple Reducing
141200	65mm X 40mm Gal Mal Hex Nipple Reducing
141201	65mm X 50mm Gal Mal Hex Nipple Reducing
141202	80mm X 50mm Gal Mal Hex Nipple Reducing
141203	80mm X 65mm Gal Mal Hex Nipple Reducing
141204	100mm X 50mm Gal Mal Hex Nipple Reducing
141205	100mm X 65mm Gal Mal Hex Nipple Reducing
141206	100mm X 80mm Gal Mal Hex Nipple Reducing

Sockets Gal Mal Iron BSP

PART No.	DESCRIPTION
141134	6mm(1/8) Gal Mal Socket
141135	8mm(1/4) Gal Mal Socket
141136	10mm(3/8) Gal Mal Socket
141137	15mm Gal Mal Socket
141138	20mm Gal Mal Socket
141139	25mm Gal Mal Socket
141140	32mm Gal Mal Socket
141141	40mm Gal Mal Socket
141142	50mm Gal Mal Socket
141143	65mm Gal Mal Socket
141144	80mm Gal Mal Socket
141145	100mm Gal Mal Socket
141146	150mm Gal Mal Socket

Sockets - Reducing Gal Mal Iron BSP

PART No.	DESCRIPTION
141147	20mm X 15mm Gal Mal Reducing Socket
141148	25mm X 15mm Gal Mal Reducing Socket
141149	25mm X 20mm Gal Mal Reducing Socket
141150	32mm X 20mm Gal Mal Reducing Socket
141151	32mm X 25mm Gal Mal Reducing Socket
141152	40mm X 25mm Gal Mal Reducing Socket
141153	40mm X 32mm Gal Mal Reducing Socket
141154	50mm X 25mm Gal Mal Reducing Socket
141155	50mm X 32mm Gal Mal Reducing Socket
141156	50mm X 40mm Gal Mal Reducing Socket
141157	65mm X 50mm Gal Mal Reducing Socket
141158	80mm X 25mm Gal Mal Reducing Socket
141159	80mm X 40mm Gal Mal Reducing Socket
141160	80mm X 50mm Gal Mal Reducing Socket
141161	80mm X 65mm Gal Mal Reducing Socket
141162	100mm X 50mm Gal Mal Reducing Socket
141163	100mm X 80mm Gal Mal Reducing Socket

Tees - Female Gal Mal Iron BSP

PART No.	DESCRIPTION
141164	6mm(1/8) Gal Mal Tee
141165	8mm(1/4) Gal Mal Tee
141166	10mm(3/8) Gal Mal Tee
141167	15mm Gal Mal Tee
141168	20mm Gal Mal Tee
141169	25mm Gal Mal Tee
141170	32mm Gal Mal Tee
141171	40mm Gal Mal Tee
141172	50mm Gal Mal Tee
141173	65mm Gal Mal Tee
141174	80mm Gal Mal Tee
141175	100mm Gal Mal Tee
141176	150mm Gal Mal Tee

Tees - Reducing Gal Mal Iron BSP

PART No.	DESCRIPTION
141268	20mm X 15mm Gal Mal Reducing Tee
141269	25mm X 15mm Gal Mal Reducing Tee
141270	25mm X 20mm Gal Mal Reducing Tee
141271	32mm X 25mm Gal Mal Reducing Tee
141272	40mm X 25mm Gal Mal Reducing Tee
141273	40mm X 32mm Gal Mal Reducing Tee
141274	50mm X 25mm Gal Mal Reducing Tee
141275	50mm X 40mm Gal Mal Reducing Tee
141276	65mm X 50mm Gal Mal Reducing Tee
141277	80mm X 25mm Gal Mal Reducing Tee
141278	80mm X 40mm Gal Mal Reducing Tee
141279	80mm X 50mm Gal Mal Reducing Tee
141280	100mm X 50mm Gal Mal Reducing Tee
141281	100mm X 65mm Gal Mal Reducing Tee

Fire Australia Co Pty Ltd.
ABN No. 13165523713
47 Rushdale St. Knoxfield VIC-3180. Tel:(03) 9764 0020, Fax: (03) 9764 0023.
E-mail : sales@fireausco.com.au www.fireausco.com.au

FIRE AUSTRALIA CO

Unions - Female X Female - Brass Seated Gal Mal Iron BSP

PART No.	DESCRIPTION
141177	15mm Gal Mal Union F/F Brass Seated
141178	20mm Gal Mal Union F/F Brass Seated
141179	25mm Gal Mal Union F/F Brass Seated
141180	32mm Gal Mal Union F/F Brass Seated
141181	40mm Gal Mal Union F/F Brass Seated
141182	50mm Gal Mal Union F/F Brass Seated
141183	65mm Gal Mal Union F/F Brass Seated
141184	80mm Gal Mal Union F/F Brass Seated
141185	100mmGal Mal Union F/F Brass Seated

Backnuts (locknuts) Gal Mal Iron BSP

PART No.	DESCRIPTION
141219	15mm Gal Mal Backnut
141220	20mm Gal Mal Backnut
141221	25mm Gal Mal Backnut
141222	32mm Gal Mal Backnut
141223	40mm Gal Mal Backnut
141224	50mm Gal Mal Backnut
141225	65mm Gal Mal Backnut
141226	80mm Gal Mal Backnut
141227	100mm Gal Mal Backnut

Crosses Gal Mal Iron BSP

PART No.	DESCRIPTION
141228	15mm Gal Mal Cross
141229	20mm Gal Mal Cross
141230	25mm Gal Mal Cross
141231	32mm Gal Mal Cross
141232	40mm Gal Mal Cross
141233	50mm Gal Mal Cross
141234	65mm Gal Mal Cross
141235	80mm Gal Mal Cross
141236	100mm Gal Mal Cross

Female X Female Elbows 45 Deg Gal Mal Iron BSP

PART No.	DESCRIPTION
141237	15mm Gal Mal Elbow F/F 45 Deg
141238	20mm Gal Mal Elbow F/F 45 Deg
141239	25mm Gal Mal Elbow F/F 45 Deg
141240	32mm Gal Mal Elbow F/F 45 Deg
141241	40mm Gal Mal Elbow F/F 45 Deg
141242	50mm Gal Mal Elbow F/F 45 Deg
141243	65mm Gal Mal Elbow F/F 45 Deg
141244	80mm Gal Mal Elbow F/F 45 Deg
141245	100mm Gal Mal Elbow F/F 45 Deg

Plugs - Square Head Gal Mal Iron BSP

PART No.	DESCRIPTION
141121	6mm(1/8) Gal Mal Plug Square Head
141122	8mm(1/4) Gal Mal Plug Square Head
141123	10mm(3/8) Gal Mal Plug Square Head
141124	15mm Gal Mal Plug Square Head
141125	20mm Gal Mal Plug Square Head
141126	25mm Gal Mal Plug Square Head
141127	32mm Gal Mal Plug Square Head
141128	40mm Gal Mal Plug Square Head
141129	50mm Gal Mal Plug Square Head
141130	65mm Gal Mal Plug Square Head
141131	80mm Gal Mal Plug Square Head
141132	100mm Gal Mal Plug Square Head
141133	150mm Gal Mal Plug Square Head

Flanges - Drilled Table D Gal Mal Iron BSP

PART No.	DESCRIPTION
141252	15mm Gal Mal Flange Drilled Table D
141253	20mm Gal Mal Flange Drilled Table D
141254	25mm Gal Mal Flange Drilled Table D
141255	32mm Gal Mal Flange Drilled Table D
141256	40mm Gal Mal Flange Drilled Table D
141257	50mm Gal Mal Flange Drilled Table D
141258	65mm Gal Mal Flange Drilled Table D
141259	80mm Gal Mal Flange Drilled Table D
141260	100mm Gal Mal Flange Drilled Table D
141261	150mm Gal Mal Flange Drilled Table D

Flanges - Oval Gal Mal Iron BSP

PART No.	DESCRIPTION
141262	15mm Gal Mal Flange Oval
141263	20mm Gal Mal Flange Oval
141264	25mm Gal Mal Flange Oval
141265	32mm Gal Mal Flange Oval
141266	40mm Gal Mal Flange Oval
141267	50mm Gal Mal Flange Oval

Fire Australia Co Pty Ltd.
ABN No. 13165523713
47 Rushdale St. Knoxfield VIC-3180. Tel:(03) 9764 0020, Fax: (03) 9764 0023.
E-mail : sales@fireausco.com.au www.fireausco.com.au

FIRE AUSTRALIA CO

Nipples Hexagon - Black Wrought Steel

PART No.	DESCRIPTION
142001	6mm (1/8) Black Wrought Steel Hex Nipple BSP
142002	8mm (1/4) Black Wrought Steel Hex Nipple BSP
142003	10mm (3/8) Black Wrought Steel Hex Nipple BSP
142004	15mm Black Wrought Steel Hex Nipple BSP
142005	20mm Black Wrought Steel Hex Nipple BSP
142006	25mm Black Wrought Steel Hex Nipple BSP
142007	32mm Black Wrought Steel Hex Nipple BSP
142008	40mm Black Wrought Steel Hex Nipple BSP
142009	50mm Black Wrought Steel Hex Nipple BSP
142010	65mm Black Wrought Steel Hex Nipple BSP
142011	80mm Black Wrought Steel Hex Nipple BSP
142012	100mm Black Wrought Steel Hex Nipple BSP

Barrel Nipples - Black Wrought Steel

PART No.	DESCRIPTION
142013	6mm (1/8) Black Wrought Steel Barrel Nipple BSP
142014	8mm (1/4) Black Wrought Steel Barrel Nipple BSP
142015	10mm (3/8) Black Wrought Steel Barrel Nipple BSP
142016	15mm Black Wrought Steel Barrel Nipple BSP
142017	20mm Black Wrought Steel Barrel Nipple BSP
142018	25mm Black Wrought Steel Barrel Nipple BSP
142019	32mm Black Wrought Steel Barrel Nipple BSP
142020	40mm Black Wrought Steel Barrel Nipple BSP
142021	50mm Black Wrought Steel Barrel Nipple BSP
142022	65mm Black Wrought Steel Barrel Nipple BSP
142023	80mm Black Wrought Steel Barrel Nipple BSP
142024	100mm Black Wrought Steel Barrel Nipple BSP

Nipples Hexagon Reducing - Black Wrought Steel

PART No.	DESCRIPTION
142025	15mm X 8mm (1/4) Black Wrought Steel Hex Nipple Reducing BSP
142026	15mm 10mm (3/8) Black Wrought Steel Hex Nipple Reducing BSP
142027	20mm X 10mm (3/8) Black Wrought Steel Hex Nipple Reducing BSP
142028	20mm X 15mm Black Wrought Steel Hex Nipple Reducing BSP
142029	25mm X 15mm Black Wrought Steel Hex Nipple Reducing BSP
142030	25mm X 20mm Black Wrought Steel Hex Nipple Reducing BSP
142031	32mm X 20mm Black Wrought Steel Hex Nipple Reducing BSP
142032	32mm X 25mm Black Wrought Steel Hex Nipple Reducing BSP
142033	40mm X 20mm Black Wrought Steel Hex Nipple Reducing BSP
142034	40mm X 25mm Black Wrought Steel Hex Nipple Reducing BSP
142035	40mm X 32mm Black Wrought Steel Hex Nipple Reducing BSP
142036	50mm X 20mm Black Wrought Steel Hex Nipple Reducing BSP
142037	50mm X 25mm Black Wrought Steel Hex Nipple Reducing BSP
142038	50mm X 32mm Black Wrought Steel Hex Nipple Reducing BSP
142039	50mm X 40mm Black Wrought Steel Hex Nipple Reducing BSP
142040	65mm X 40mm Black Wrought Steel Hex Nipple Reducing BSP
142041	65mm X 50mm Black Wrought Steel Hex Nipple Reducing BSP
142042	80mm X 50mm Black Wrought Steel Hex Nipple Reducing BSP
142043	80mm X 65mm Black Wrought Steel Hex Nipple Reducing BSP
142044	100mm X 50mm Black Wrought Steel Hex Nipple Reducing BSP
142045	100mm X 65mm Black Wrought Steel Hex Nipple Reducing BSP
142046	100mm X 80mm Black Wrought Steel Hex Nipple Reducing BSP

Bushes - Black Wrought Steel

PART No.	DESCRIPTION
142047	8mm(1/4)X 6mm (1/8) Black Wrought Steel Bush BSP
142048	10mm X 6mm (1/8) Black Wrought Steel Bush BSP
142049	10mm X 8mm (1/4) Black Wrought Steel Bush BSP
142050	15mm X 8mm (1/4) Black Wrought Steel Bush BSP
142051	15mm X 10mm Black Wrought Steel Bush BSP
142052	20mm X 8mm (1/4) Black Wrought Steel Bush BSP
142053	20mm X 10mm Black Wrought Steel Bush BSP
142054	20mm X 15mm Black Wrought Steel Bush BSP
142055	25mm X 8mm (1/4) Black Wrought Steel Bush BSP
142056	25mm X 10mm Black Wrought Steel Bush BSP
142057	25mm X 15mm Black Wrought Steel Bush BSP
142058	25mm X 20mm Black Wrought Steel Bush BSP
142059	32mm X 10mm Black Wrought Steel Bush BSP
142060	32mm X 15mm Black Wrought Steel Bush BSP
142061	32mm X 20mm Black Wrought Steel Bush BSP
142062	32mm X 25mm Black Wrought Steel Bush BSP
142063	40mm X 15mm Black Wrought Steel Bush BSP
142064	40mm X 20mm Black Wrought Steel Bush BSP
142065	40mm X 25mm Black Wrought Steel Bush BSP
142066	40mm X 25mm Black Wrought Steel Bush BSP
142067	50mm X 15mm Black Wrought Steel Bush BSP
142068	50mm X 20mm Black Wrought Steel Bush BSP
142069	50mm X 25mm Black Wrought Steel Bush BSP
142070	50mm X 32mm Black Wrought Steel Bush BSP
142071	50mm X 40mm Black Wrought Steel Bush BSP
142072	65mm X 40mm Black Wrought Steel Bush BSP
142073	65mm X 50mm Black Wrought Steel Bush BSP
142074	80mm X 25mm Black Wrought Steel Bush BSP
142075	80mm X 40mm Black Wrought Steel Bush BSP
142076	80mm X 50mm Black Wrought Steel Bush BSP
142077	80mm X 65mm Black Wrought Steel Bush BSP
142078	100mm X 50mm Black Wrought Steel Bush BSP
142079	100mm X 65mm Black Wrought Steel Bush BSP
142080	100mm X 80mm Black Wrought Steel Bush BSP

Fire Australia Co Pty Ltd.
ABN No. 13165523713
47 Rushdale St. Knoxfield VIC-3180. Tel:(03) 9764 0020, Fax: (03) 9764 0023.
E-mail : sales@fireausco.com.au www.fireausco.com.au

FIRE AUSTRALIA CO

Sockets - Black Wrought Steel

PART No.	DESCRIPTION
142081	6mm(1/8) Black Wrought Steel Socket BSPP
142082	8mm(1/4) Black Wrought Steel Socket BSPP
142083	10mm(3/8) Black Wrought Steel Socket BSPP
142084	15mm Black Wrought Steel Socket BSPP
142085	20mm Black Wrought Steel Socket BSPP
142086	25mm Black Wrought Steel Socket BSPP
142087	32mm Black Wrought Steel Socket BSPP
142088	40mm Black Wrought Steel Socket BSPP
142089	50mm Black Wrought Steel Socket BSPP
142090	65mm Black Wrought Steel Socket BSPP
142091	80mm Black Wrought Steel Socket BSPP
142092	100mm Black Wrought Steel Socket BSPP
142093	150mm Black Wrought Steel Socket BSPP

Half Sockets - Black Wrought Steel

PART No.	DESCRIPTION
142094	10mm(3/8) Black Wrought Steel Half Socket BSPP
142095	15mm Black Wrought Steel Half Socket BSPP
142096	20mm Black Steel Half Socket BSPP
142097	25mm Black Wrought Steel Half Socket BSPP
142098	32mm Black Wrought Steel Half Socket BSPP
142099	40mm Black Wrought Steel Half Socket BSPP
142100	50mm Black Wrought Steel Half Socket BSPP
142101	65mm Black Wrought Steel Half Socket BSPP
142102	80mm Black Wrought Steel Half Socket BSPP
142103	100mm Black Wrought Steel Half Socket BSPP

Elbows - Female X Female 90 Deg - Black Wrought Steel

PART No.	DESCRIPTION
142119	6mm(1/8) Black Wrought Steel Elbow F/F 90 Deg BSP
142120	8mm(1/4) Black Wrought Steel Elbow F/F 90 Deg BSP
142121	10mm Black Wrought Steel Elbow F/F 90 Deg BSP
142122	15mm Black Wrought Steel Elbow F/F 90 Deg BSP
142123	20mm Black Wrought Steel Elbow F/F 90 Deg BSP
142124	25mm Black Wrought Steel Elbow F/F 90 Deg BSP
142125	32mm Black Wrought Steel Elbow F/F 90 Deg BSP
142126	40mm Black Wrought Steel Elbow F/F 90 Deg BSP
142127	50mm Black Wrought Steel Elbow F/F 90 Deg BSP
142128	65mm Black Wrought Steel Elbow F/F 90 Deg BSP
142129	80mm Black Wrought Steel Elbow F/F 90 Deg BSP
142130	100mm Black Wrought Steel Elbow F/F 90 Deg BSP

Fire Australia Co Pty Ltd.
ABN No. 13165523713
47 Rushdale St. Knoxfield VIC-3180. Tel:(03) 9764 0020, Fax: (03) 9764 0023.
E-mail : sales@fireausco.com.au www.fireausco.com.au

Elbows Male X Female 90 Deg - Black Wrought Steel

PART No.	DESCRIPTION
142131	8mm(1/4) Black Wrought Steel Elbow M/F 90 Deg BSP
142132	10mm Black Wrought Steel Elbow M/F 90 Deg BSP
142133	15mm Black Wrought Steel Elbow M/F 90 Deg BSP
142134	20mm Black Wrought Steel Elbow M/F 90 Deg BSP
142135	25mm Black Wrought Steel Elbow M/F 90 Deg BSP
142136	32mm Black Wrought Steel Elbow M/F 90 Deg BSP
142137	40mm Black Wrought Steel Elbow M/F 90 Deg BSP
142138	50mm Black Wrought Steel Elbow M/F 90 Deg BSP
142139	65mm Black Wrought Steel Elbow M/F 90 Deg BSP
142140	80mm Black Wrought Steel Elbow M/F 90 Deg BSP
142141	100mm Black Wrought Steel Elbow M/F 90 Deg BSP

Bends Male X Male BSPT 90 Deg - Black

PART No.	DESCRIPTION
142164	8mm(1/4) Black Steel Bend Male / Male 90 Deg BSP
142165	10mm Black Steel Bend Male / Male 90 Deg BSP
142166	15mm Black Steel Bend Male / Male 90 Deg BSP
142167	20mm Black Steel Bend Male / Male 90 Deg BSP
142168	25mm Black Steel Bend Male / Male 90 Deg BSP
142169	32mm Black Steel Bend Male / Male 90 Deg BSP
142170	40mm Black Steel Bend Male / Male 90 Deg BSP
142171	50mm Black Steel Bend Male / Male 90 Deg BSP
142172	65mm Black Steel Bend Male / Male 90 Deg BSP
142173	80mm Black Steel Bend Male / Male 90 Deg BSP
142174	100mm Black Steel Bend Male / Male 90 Deg BSP

Bends - Male X Male BSPT 45 Deg

PART No.	DESCRIPTION
142175	15mm Black Steel Bend Male/Male 45 Deg BSP
142176	20mm Black Steel Bend Male/Male 45 Deg BSP
142177	25mm Black Steel Bend Male/Male 45 Deg BSP
142178	32mm Black Steel Bend Male/Male 45 Deg BSP
142179	40mm Black Steel Bend Male/Male 45 Deg BSP
142180	50mm Black Steel Bend Male/Male 45 Deg BSP
142181	65mm Black Steel Bend Male/Male 45 Deg BSP
142182	80mm Black Steel Bend Male/Male 45 Deg BSP
142183	100mm Black Steel Bend Male/Male 45 Deg BSP

Fire Australia Co Pty Ltd.
ABN No. 13165523713
47 Rushdale St. Knoxfield VIC-3180. Tel:(03) 9764 0020, Fax: (03) 9764 0023.
E-mail : sales@fireausco.com.au www.fireausco.com.au

FIRE AUSTRALIA CO

Bends Bevelled End (welding) 90 Deg - Black

PART No.	DESCRIPTION
142184	15mm Black Steel Bend Bevelled End 90 Deg
142185	20mm Black Steel Bend Bevelled End 90 Deg
142186	25mm Black Steel Bend Bevelled End 90 Deg
142187	32mm Black Steel Bend Bevelled End 90 Deg
142188	40mm Black Steel Bend Bevelled End 90 Deg
142189	50mm Black Steel Bend Bevelled End 90 Deg
142190	65mm Black Steel Bend Bevelled End 90 Deg
142191	80mm Black Steel Bend Bevelled End 90 Deg
142192	100mm Black Steel Bend Bevelled End 90 Deg
142193	150mm Black Steel Bend Bevelled End 90 Deg

Tees - Black Wrought Steel

PART No.	DESCRIPTION
142194	6mm(1/8) Black Wrought Steel Tee BSP
142195	8mm(1/4) Black Wrought Steel Tee BSP
142196	10mm(3/8) Black Wrought Steel Tee BSP
142197	15mm Black Wrought Steel Tee BSP
142198	20mm Black Wrought Steel Tee BSP
142199	25mm Black Wrought Steel Tee BSP
142200	32mm Black Wrought Steel Tee BSP
142201	40mm Black Wrought Steel Tee BSP
142202	50mm Black Wrought Steel Tee BSP
142203	65mm Black Wrought Steel Tee BSP
142204	80mm Black Wrought Steel Tee BSP
142205	100mm Black Wrought Steel Tee BSP

Tees - Reducing - Black Wrought Steel

PART No.	DESCRIPTION
142206	20mm X 15mm Black Wrought Steel Reducing Tee BSP
142207	25mm X 15mm Black Wrought Steel Reducing Tee BSP
142208	25mm X 20mm Black Wrought Steel Reducing Tee BSP
142209	32mm X 25mm Black Wrought Steel Reducing Tee BSP
142210	40mm X 25mm Black Wrought Steel Reducing Tee BSP
142211	40mm X 32mm Black Wrought Steel Reducing Tee BSP
142212	50mm X 25mm Black Wrought Steel Reducing Tee BSP
142213	50mm X 32mm Black Wrought Steel Reducing Tee BSP
142214	50mm X 40mm Black Wrought Steel Reducing Tee BSP

Fire Australia Co Pty Ltd.
ABN No. 13165523713
47 Rushdale St. Knoxfield VIC-3180. Tel:(03) 9764 0020, Fax: (03) 9764 0023.
E-mail : sales@fireausco.com.au www.fireausco.com.au

Unions Female X Female Bronze / Steel Seat - Black Wrought Steel

PART No.	DESCRIPTION
142215	8mm(1/4) Black Wrought Steel Union F/F Bronze/Steel Seat BSP
142216	10mm Black Wrought Steel Union F/F Bronze/Steel Seat BSP
142217	15mm Black Wrought Steel Union F/F Bronze/Steel Seat BSP
142218	20mm Black Wrought Steel Union F/F Bronze/Steel Seat BSP
142219	25mm Black Wrought Steel Union F/F Bronze/Steel Seat BSP
142220	32mm Black Wrought Steel Union F/F Bronze/Steel Seat BSP
142221	40mm Black Wrought Steel Union F/F Bronze/Steel Seat BSP
142222	50mm Black Wrought Steel Union F/F Bronze/Steel Seat BSP
142223	65mm Black Wrought Steel Union F/F Bronze/Steel Seat BSP
142224	80mm Black Wrought Steel Union F/F Bronze/Steel Seat BSP
142225	100mm Black Wrought Steel Union F/F Bronze/Steel Seat BSP

Unions Male X Female Bronze / Steel Seat - Black Wrought Steel

PART No.	DESCRIPTION
142226	8mm(1/4) Black Wrought Steel Union M/F Bronze/Steel Seat BSP
142227	10mm Black Wrought Steel Union M/F Bronze/Steel Seat BSP
142228	15mm Black Wrought Steel Union M/F Bronze/Steel Seat BSP
142229	20mm Black Wrought Steel Union M/F Bronze/Steel Seat BSP
142230	25mm Black Wrought Steel Union M/F Bronze/Steel Seat BSP
142231	32mm Black Wrought Steel Union M/F Bronze/Steel Seat BSP
142232	40mm Black Wrought Steel Union M/F Bronze/Steel Seat BSP
142233	50mm Black Wrought Steel Union M/F Bronze/Steel Seat BSP
142234	65mm Black Wrought Steel Union M/F Bronze/Steel Seat BSP
142235	80mm Black Wrought Steel Union M/F Bronze/Steel Seat BSP
142236	100mm Black Wrought Steel Union M/F Bronze/Steel Seat BSP

Plugs Hex Head - Black Wrought Steel

PART No.	DESCRIPTION
142237	6mm(1/8) Black Wrought Steel Plug Hex Head BSP
142238	8mm(1/4) Black Wrought Steel Plug Hex Head BSP
142239	10mm(3/8) Black Wrought Steel Plug Hex Head BSP
142240	15mm Black Wrought Steel Plug Hex Head BSP
142241	20mm Black Wrought Steel Plug Hex Head BSP
142242	25mm Black Wrought Steel Plug Hex Head BSP
142243	32mm Black Wrought Steel Plug Hex Head BSP
142244	40mm Black Wrought Steel Plug Hex Head BSP
142245	50mm Black Wrought Steel Plug Hex Head BSP
142246	65mm Black Wrought Steel Plug Hex Head BSP
142247	80mm Black Wrought Steel Plug Hex Head BSP
142248	100mm Black Wrought Steel Plug Hex Head BSP

Fire Australia Co Pty Ltd.
ABN No. 13165523713
47 Rushdale St. Knoxfield VIC-3180. Tel:(03) 9764 0020, Fax: (03) 9764 0023.
E-mail : sales@fireausco.com.au www.fireausco.com.au

FIRE AUSTRALIA CO

Caps - Black Wrought Steel

PART No.	DESCRIPTION
142249	8mm(1/4) Black Wrought Steel Cap BSP
142250	10mm Black Wrought Steel Cap BSP
142251	15mm Black Wrought Steel Cap BSP
142252	20mm Black Wrought Steel Cap BSP
142253	25mm Black Wrought Steel Cap BSP
142254	32mm Black Wrought Steel Cap BSP
142255	40mm Black Wrought Steel Cap BSP
142256	50mm Black Wrought Steel Cap BSP
142257	65mm Black Wrought Steel Cap BSP
142258	80mm Black Wrought Steel Cap BSP
142259	100mm Black Wrought Steel Cap BSP

Sockets Reducing - Black Wrought Steel

PART No.	DESCRIPTION
142104	15mm X 8mm(1/4) Black Wrought Steel Reducing Socket BSP
142105	15mm X 10mm Black Wrought Steel Reducing Socket BSP
142106	20mm X 8mm(1/4) Black Wrought Steel Reducing Socket BSP
142107	20mm X 10mm Black Wrought Steel Reducing Socket BSP
142108	20mm X 15mm Black Wrought Steel Reducing Socket BSP
142109	25mm X 15mm Black Wrought Steel Reducing Socket BSP
142110	25mm X 20mm Black Wrought Steel Reducing Socket BSP
142111	32mm X 20mm Black Wrought Steel Reducing Socket BSP
142112	32mm X 25mm Black Wrought Steel Reducing Socket BSP
142113	40mm X 20mm Black Wrought Steel Reducing Socket BSP
142114	40mm X 25mm Black Wrought Steel Reducing Socket BSP
142115	40mm X 32mm Black Wrought Steel Reducing Socket BSP
142116	50mm X 25mm Black Wrought Steel Reducing Socket BSP
142117	50mm X 32mm Black Wrought Steel Reducing Socket BSP
142118	50mm X 40mm Black Wrought Steel Reducing Socket BSP

Elbows Female X Female 45 Deg - Black Wrought Steel

PART No.	DESCRIPTION
142142	15mm Black Wrought Steel Elbow F/F 45 Deg BSP
142143	20mm Black Wrought Steel Elbow F/F 45 Deg BSP
142144	25mm Black Wrought Steel Elbow F/F 45 Deg BSP
142145	32mm Black Wrought Steel Elbow F/F 45 Deg BSP
142146	40mm Black Wrought Steel Elbow F/F 45 Deg BSP
142147	50mm Black Wrought Steel Elbow F/F 45 Deg BSP
142148	65mm Black Wrought Steel Elbow F/F 45 Deg BSP
142149	80mm Black Wrought Steel Elbow F/F 45 Deg BSP
142150	100mm Black Wrought Steel Elbow F/F 45 Deg BSP

Backnuts (locknuts) - Black Wrought Steel

PART No.	DESCRIPTION
142157	15mm Black Wrought Steel Backnut BSP
142158	20mm Black Wrought Steel Backnut BSP
142159	25mm Black Wrought Steel Backnut BSP
142160	32mm Black Wrought Steel Backnut BSP
142161	40mm Black Wrought Steel Backnut BSP
142162	50mm Black Wrought Steel Backnut BSP
142163	80mm Black Wrought Steel Backnut BSP

Crosses - Black Wrought Steel

PART No.	DESCRIPTION
142151	15mm Black Wrought Steel Cross BSP
142152	20mm Black Wrought Steel Cross BSP
142153	25mm Black Wrought Steel Cross BSP
142154	32mm Black Wrought Steel Cross BSP
142155	40mm Black Wrought Steel Cross BSP
142156	50mm Black Wrought Steel Cross BSP

Toe (pipe) Nipple Threaded One End BSPT - Black Wrought Steel

PART No.	DESCRIPTION
142260	15mm Black Wrought Steel Toe Nipple BSP (35mm OAL)
142261	20mm Black Wrought Steel Toe Nipple BSP (35mm OAL)
142262	25mm Black Wrought Steel Toe Nipple BSP (40mm OAL)
142263	32mm Black Wrought Steel Toe Nipple BSP (50mm OAL)
142264	40mm Black Wrought Steel Toe Nipple BSP (50mm OAL)
142265	50mm Black Wrought Steel Toe Nipple BSP (50mm OAL)
142266	65mm Black Wrought Steel Toe Nipple BSP (60mm OAL)
142267	80mm Black Wrought Steel Toe Nipple BSP (70mm OAL)
142268	100mm Black Wrought Steel Toe Nipple BSP (80mm OAL)
142269	150mm Black Wrought Steel Toe Nipple BSP (150mm OAL)

Fire Australia Co Pty Ltd.
ABN No. 13165523713
47 Rushdale St. Knoxfield VIC-3180. Tel:(03) 9764 0020, Fax: (03) 9764 0023.
E-mail : sales@fireausco.com.au www.fireausco.com.au

FIRE AUSTRALIA CO

Nipples Hexagon - Gal Wrought Steel

PART No.	DESCRIPTION
143001	6mm(1/8) Gal Wrought Steel Hex Nipple BSP
143002	8mm(1/4) Gal Wrought Steel Hex Nipple BSP
143003	10mm(3/8) Gal Wrought Steel Hex Nipple BSP
143004	15mm Gal Wrought Steel Hex Nipple BSP
143005	20mm Gal Wrought Steel Hex Nipple BSP
143006	25mm Gal Wrought Steel Hex Nipple BSP
143007	32mm Gal Wrought Steel Hex Nipple BSP
143008	40mm Gal Wrought Steel Hex Nipple BSP
143009	50mm Gal Wrought Steel Hex Nipple BSP
143010	65mm Gal Wrought Steel Hex Nipple BSP
143011	80mm Gal Wrought Steel Hex Nipple BSP
143012	100mm Gal Wrought Steel Hex Nipple BSP

Nipples Hexagon Reducing - Gal Wrought Steel

PART No.	DESCRIPTION
143013	15mm X 8mm(1/4) Gal Wrought Steel Hex Nipple Reducing BSP
143014	15mm X 10mm(3/8) Gal Wrought Steel Hex Nipple Reducing BSP
143015	20mm X 10mm(3/8) Gal Wrought Steel Hex Nipple Reducing BSP
143016	20mm X 15mm Gal Wrought Steel Hex Nipple Reducing BSP
143017	25mm X 15mm Gal Wrought Steel Hex Nipple Reducing BSP
143018	25mm X 20mm Gal Wrought Steel Hex Nipple Reducing BSP
143019	32mm X 20mm Gal Wrought Steel Hex Nipple Reducing BSP
143020	32mm X 25mm Gal Wrought Steel Hex Nipple Reducing BSP
143021	40mm X 25mm Gal Wrought Steel Hex Nipple Reducing BSP
143022	40mm X 32mm Gal Wrought Steel Hex Nipple Reducing BSP
143023	50mm X 25mm Gal Wrought Steel Hex Nipple Reducing BSP
143024	50mm X 32mm Gal Wrought Steel Hex Nipple Reducing BSP
143025	50mm X 40mm Gal Wrought Steel Hex Nipple Reducing BSP
143026	65mm X 40mm Gal Wrought Steel Hex Nipple Reducing BSP
143027	65mm X 50mm Gal Wrought Steel Hex Nipple Reducing BSP
143028	80mm X 50mm Gal Wrought Steel Hex Nipple Reducing BSP
143029	80mm X 65mm Gal Wrought Steel Hex Nipple Reducing BSP
143030	100mm X 50mm Gal Wrought Steel Hex Nipple Reducing BSP
143031	100mm X 80mm Gal Wrought Steel Hex Nipple Reducing BSP

Bushes - Gal Wrought Steel

PART No.	DESCRIPTION
143032	10mm X 8mm(1/4) Gal Wrought Steel Bush BSP
143033	15mm X 8mm(1/4) Gal Wrought Steel Bush BSP
143034	15mm X 10mm Gal Wrought Steel Bush BSP
143035	20mm X 8mm(1/4) Gal Wrought Steel Bush BSP
143036	20mm X 15mm Gal Wrought Steel Bush BSP
143037	25mm X 8mm(1/4) Gal Wrought Steel Bush BSP
143038	25mm X 10mm Gal Wrought Steel Bush BSP
143039	25mm X 15mm Gal Wrought Steel Bush BSP
143040	25mm X 20mm Gal Wrought Steel Bush BSP
143041	32mm X 15mm Gal Wrought Steel Bush BSP
143042	32mm X 20mm Gal Wrought Steel Bush BSP
143043	32mm X 25mm Gal Wrought Steel Bush BSP
143044	40mm X 15mm Gal Wrought Steel Bush BSP
143045	40mm X 20mm Gal Wrought Steel Bush BSP
143046	40mm X 25mm Gal Wrought Steel Bush BSP
143047	40mm X 25mm Gal Wrought Steel Bush BSP
143048	50mm X 15mm Gal Wrought Steel Bush BSP
143049	50mm X 20mm Gal Wrought Steel Bush BSP
143050	50mm X 25mm Gal Wrought Steel Bush BSP
143051	50mm X 32mm Gal Wrought Steel Bush BSP
143052	50mm X 40mm Gal Wrought Steel Bush BSP
143053	65mm X 40mm Gal Wrought Steel Bush BSP
143054	65mm X 50mm Gal Wrought Steel Bush BSP
143055	80mm X 25mm Gal Wrought Steel Bush BSP
143056	80mm X 40mm Gal Wrought Steel Bush BSP
143057	80mm X 50mm Gal Wrought Steel Bush BSP
143058	80mm X 65mm Gal Wrought Steel Bush BSP
143059	100mm X 50mm Gal Wrought Steel Bush BSP
143060	100mm X 65mm Gal Wrought Steel Bush BSP
143061	100mm X 80mm Gal Wrought Steel Bush BSP

Sockets - Gal Wrought Steel

PART No.	DESCRIPTION
143062	6mm(1/8) Gal Wrought Steel Socket BSPP
143063	8mm(1/4) Gal Wrought Steel Socket BSPP
143064	10mm(3/8) Gal Wrought Steel Socket BSPP
143065	15mm Gal Wrought Steel Socket BSPP
143066	20mm Gal Wrought Steel Socket BSPP
143067	25mm Gal Wrought Steel Socket BSPP
143068	32mm Gal Wrought Steel Socket BSPP
143069	40mm Gal Wrought Steel Socket BSPP
143070	50mm Gal Wrought Steel Socket BSPP
143071	65mm Gal Wrought Steel Socket BSPP
143072	80mm Gal Wrought Steel Socket BSPP
143073	100mm Gal Wrought Steel Socket BSPP
143074	150mm Gal Wrought Steel Socket BSPP

Fire Australia Co Pty Ltd.
ABN No. 13165523713
47 Rushdale St. Knoxfield VIC-3180. Tel:(03) 9764 0020, Fax: (03) 9764 0023.
E-mail : sales@fireausco.com.au www.fireausco.com.au

FIRE AUSTRALIA CO

Elbows Female X Female 90 Deg - Gal Wrought Steel

PART NO.	DESCRIPTION
143075	6mm(1/8) Gal Wrought Steel Elbow F/F 90 Deg BSP
143076	8mm(1/4) Gal Wrought Steel Elbow F/F 90 Deg BSP
143077	10mm Gal Wrought Steel Elbow F/F 90 Deg BSP
143078	15mm Gal Wrought Steel Elbow F/F 90 Deg BSP
143079	20mm Gal Wrought Steel Elbow F/F 90 Deg BSP
143080	25mm Gal Wrought Steel Elbow F/F 90 Deg BSP
143081	32mm Gal Wrought Steel Elbow F/F 90 Deg BSP
143082	40mm Gal Wrought Steel Elbow F/F 90 Deg BSP
143083	50mm Gal Wrought Steel Elbow F/F 90 Deg BSP
143084	65mm Gal Wrought Steel Elbow F/F 90 Deg BSP
143085	80mm Gal Wrought Steel Elbow F/F 90 Deg BSP
143086	100mm Gal Wrought Steel Elbow F/F 90 Deg BSP

Bends Male X Female BSPT 90 Deg - Gal Wrought Steel

PART NO.	DESCRIPTION
143087	15mm Gal Wrought Steel Elbow M/F 90 Deg BSP
143088	20mm Gal Wrought Steel Elbow M/F 90 Deg BSP
143089	25mm Gal Wrought Steel Elbow M/F 90 Deg BSP
143090	32mm Gal Wrought Steel Elbow M/F 90 Deg BSP
143091	40mm Gal Wrought Steel Elbow M/F 90 Deg BSP
143092	50mm Gal Wrought Steel Elbow M/F 90 Deg BSP
143093	65mm Gal Wrought Steel Elbow M/F 90 Deg BSP
143094	80mm Gal Wrought Steel Elbow M/F 90 Deg BSP
143095	100mm Gal Wrought Steel Elbow M/F 90 Deg BSP

Bends Male X Male BSPT 90 Deg - Gal Steel

PART NO.	DESCRIPTION
143096	15mm Gal Steel Bend Male/Male 90 Deg BSP
143097	20mm Gal Steel Bend Male/Male 90 Deg BSP
143098	25mm Gal Steel Bend Male/Male 90 Deg BSP
143099	32mm Gal Steel Bend Male/Male 90 Deg BSP
143100	40mm Gal Steel Bend Male/Male 90 Deg BSP
143101	50mm Gal Steel Bend Male/Male 90 Deg BSP
143102	65mm Gal Steel Bend Male/Male 90 Deg BSP
143103	80mm Gal Steel Bend Male/Male 90 Deg BSP
143104	100mm Gal Steel Bend Male/Male 90 Deg BSP

Bends Male X Male BSPT 45 Deg - Gal Steel

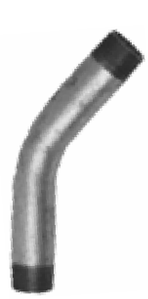

PART NO.	DESCRIPTION
143105	15mm Gal Steel Bend Male/Male 45 Deg BSP
143106	20mm Gal Steel Bend Male/Male 45 Deg BSP
143107	25mm Gal Steel Bend Male/Male 45 Deg BSP
143108	32mm Gal Steel Bend Male/Male 45 Deg BSP
143109	40mm Gal Steel Bend Male/Male 45 Deg BSP
143110	50mm Gal Steel Bend Male/Male 45 Deg BSP
143111	65mm Gal Steel Bend Male/Male 45 Deg BSP
143112	80mm Gal Steel Bend Male/Male 45 Deg BSP
143113	100mm Gal Steel Bend Male/Male 45 Deg BSP

Fire Australia Co Pty Ltd.
ABN No. 13165523713
47 Rushdale St. Knoxfield VIC-3180. Tel:(03) 9764 0020, Fax: (03) 9764 0023.
E-mail : sales@fireausco.com.au www.fireausco.com.au

Tees - Gal Wrought Steel

PART No.	DESCRIPTION
143114	6mm(1/8) Gal Wrought Steel Tee BSP
143115	8mm(1/4) Gal Wrought Steel Tee BSP
143116	10mm(3/8) Gal Wrought Steel Tee BSP
143117	15mm Gal Wrought Steel Tee BSP
143118	20mm Gal Wrought Steel Tee BSP
143119	25mm Gal Wrought Steel Tee BSP
143120	32mm Gal Wrought Steel Tee BSP
143121	40mm Gal Wrought Steel Tee BSP
143122	50mm Gal Wrought Steel Tee BSP
143123	65mm Gal Wrought Steel Tee BSP
143124	80mm Gal Wrought Steel Tee BSP
143125	100mm Gal Wrought Steel Tee BSP

Unions Female X Female Bronze / Steel Seat - Gal Wrought Steel

PART No.	DESCRIPTION
143126	15mm Gal Wrought Steel Union F/F Bronze/Steel Seat BSP
143127	20mm Gal Wrought Steel Union F/F Bronze/Steel Seat BSP
143128	25mm Gal Wrought Steel Union F/F Bronze/Steel Seat BSP
143129	32mm Gal Wrought Steel Union F/F Bronze/Steel Seat BSP
143130	40mm Gal Wrought Steel Union F/F Bronze/Steel Seat BSP
143131	50mm Gal Wrought Steel Union F/F Bronze/Steel Seat BSP
143132	65mm Gal Wrought Steel Union F/F Bronze/Steel Seat BSP
143133	80mm Gal Wrought Steel Union F/F Bronze/Steel Seat BSP
143134	100mm Gal Wrought Steel Union F/F Bronze/Steel Seat BSP

Unions Male X Female Bronze / Steel Seat - Gal Wrought Steel

PART No.	DESCRIPTION
143135	15mm Gal Wrought Steel Union M/F Bronze/Steel Seat BSP
143136	20mm Gal Wrought Steel Union M/F Bronze/Steel Seat BSP
143137	25mm Gal Wrought Steel Union M/F Bronze/Steel Seat BSP
143138	32mm Gal Wrought Steel Union M/F Bronze/Steel Seat BSP
143139	40mm Gal Wrought Steel Union M/F Bronze/Steel Seat BSP
143140	50mm Gal Wrought Steel Union M/F Bronze/Steel Seat BSP
143141	65mm Gal Wrought Steel Union M/F Bronze/Steel Seat BSP
143142	80mm Gal Wrought Steel Union M/F Bronze/Steel Seat BSP

Gal Steel Plug Hex Head - Gal Wrought Steel

PART No.	DESCRIPTION
143143	6mm(1/8) Gal Wrought Steel Plug Hex Head BSP
143144	8mm(1/4) Gal Wrought Steel Plug Hex Head BSP
143145	10mm(3/8) Gal Wrought Steel Plug Hex Head BSP
143146	15mm Gal Wrought Steel Plug Hex Head BSP
143147	20mm Gal Wrought Steel Plug Hex Head BSP
143148	25mm Gal Wrought Steel Plug Hex Head BSP
143149	32mm Gal Wrought Steel Plug Hex Head BSP
143150	40mm Gal Wrought Steel Plug Hex Head BSP
143151	50mm Gal Wrought Steel Plug Hex Head BSP
143152	65mm Gal Wrought Steel Plug Hex Head BSP
143153	80mm Gal Wrought Steel Plug Hex Head BSP
143154	100mm Gal Wrought Steel Plug Hex Head BSP

Fire Australia Co Pty Ltd.
ABN No. 13165523713
47 Rushdale St. Knoxfield VIC-3180. Tel:(03) 9764 0020, Fax: (03) 9764 0023.
E-mail : sales@fireausco.com.au www.fireausco.com.au

Caps - Gal Wrought Steel

PART No.	DESCRIPTION
143155	15mm Gal Wrought Steel Cap BSP
143156	20mm Gal Wrought Steel Cap BSP
143157	25mm Gal Wrought Steel Cap BSP
143158	32mm Gal Wrought Steel Cap BSP
143159	40mm Gal Wrought Steel Cap BSP
143160	50mm Gal Wrought Steel Cap BSP
143161	65mm Gal Wrought Steel Cap BSP
143162	80mm Gal Wrought Steel Cap BSP
143163	100mm Gal Wrought Steel Cap BSP

Barrel Nipples - Gal Wrought Steel

PART No.	DESCRIPTION
143164	8mm(1/4) Gal Wrought Steel Barrel Nipple BSP
143165	10mm Gal Wrought Steel Barrel Nipple BSP
143166	15mm Gal Wrought Steel Barrel Nipple BSP
143167	20mm Gal Wrought Steel Barrel Nipple BSP
143168	25mm Gal Wrought Steel Barrel Nipple BSP
143169	32mm Gal Wrought Steel Barrel Nipple BSP
143170	40mm Gal Wrought Steel Barrel Nipple BSP
143171	50mm Gal Wrought Steel Barrel Nipple BSP
143172	65mm Gal Wrought Steel Barrel Nipple BSP
143173	80mm Gal Wrought Steel Barrel Nipple BSP
143174	100mm Gal Wrought Steel Barrel Nipple BSP

Nipples Hexagon - 316 Stainless Steel

PART No.	DESCRIPTION
144001	6mm(1/8) 316 S/S Hex Nipple BSP
144002	8mm(1/4) 316 S/S Hex Nipple BSP
144003	10mm(3/8) 316 S/S Hex Nipple BSP
144004	15mm 316 S/S Hex Nipple BSP
144005	20mm 316 S/S Hex Nipple BSP
144006	25mm 316 S/S Hex Nipple BSP
144007	32mm 316 S/S Hex Nipple BSP
144008	40mm 316 S/S Hex Nipple BSP
144009	50mm 316 S/S Hex Nipple BSP
144010	65mm 316 S/S Hex Nipple BSP
144011	80mm 316 S/S Hex Nipple BSP
144012	100mm 316 S/S Hex Nipple BSP

Barrel Nipples - 316 Stainless Steel

PART No.	DESCRIPTION
144013	6mm(1/8) 316 S/S Barrel Nipple BSP
144014	8mm(1/4) 316 S/S Barrel Nipple BSP
144015	10mm(3/8) 316 S/S Barrel Nipple BSP
144016	15mm 316 S/S Barrel Nipple BSP
144017	20mm 316 S/S Barrel Nipple BSP
144018	25mm 316 S/S Barrel Nipple BSP
144019	32mm 316 S/S Barrel Nipple BSP
144020	40mm 316 S/S Barrel Nipple BSP
144021	50mm 316 S/S Barrel Nipple BSP
144022	65mm 316 S/S Barrel Nipple BSP
144023	80mm 316 S/S Barrel Nipple BSP
144024	100mm 316 S/S Barrel Nipple BSP

Fire Australia Co Pty Ltd.
ABN No. 13165523713
47 Rushdale St. Knoxfield VIC-3180. Tel:(03) 9764 0020, Fax: (03) 9764 0023.
E-mail : sales@fireausco.com.au www.fireausco.com.au

FIRE AUSTRALIA CO

Nipples Hexagon Reducing - 316 Stainless Steel

PART No.	DESCRIPTION
144025	10mm(3/8) X 8mm(1/4) 316 S/S Hex Nipple Reducing BSP
144026	15mm X 8mm(1/4) 316 S/S Hex Nipple Reducing BSP
144027	15mm 10mm(3/8) 316 S/S Hex Nipple Reducing BSP
144028	20mm X 10mm(3/8) 316 S/S Hex Nipple Reducing BSP
144029	20mm X 15mm 316 S/S Hex Nipple Reducing BSP
144030	25mm X 10mm(3/8) 316 S/S Hex Nipple Reducing BSP
144031	25mm X 15mm 316 S/S Hex Nipple Reducing BSP
144032	25mm X 20mm 316 S/S Hex Nipple Reducing BSP
144033	32mm X 15mm 316 S/S Hex Nipple Reducing BSP
144034	32mm X 20mm 316 S/S Hex Nipple Reducing BSP
144035	32mm X 25mm 316 S/S Hex Nipple Reducing BSP
144036	40mm X 25mm 316 S/S Hex Nipple Reducing BSP
144037	40mm X 32mm 316 S/S Hex Nipple Reducing BSP
144038	50mm X 25mm 316 S/S Hex Nipple Reducing BSP
144039	50mm X 32mm 316 S/S Hex Nipple Reducing BSP
144040	50mm X 40mm 316 S/S Hex Nipple Reducing BSP
144041	65mm X 40mm 316 S/S Hex Nipple Reducing BSP
144042	65mm X 50mm 316 S/S Hex Nipple Reducing BSP
144043	80mm X 40mm 316 S/S Hex Nipple Reducing BSP
144044	80mm X 50mm 316 S/S Hex Nipple Reducing BSP
144045	80mm X 65mm 316 S/S Hex Nipple Reducing BSP
144046	100mm X 50mm 316 S/S Hex Nipple Reducing BSP
144047	100mm X 65mm 316 S/S Hex Nipple Reducing BSP
144048	100mm X 80mm 316 S/S Hex Nipple Reducing BSP

Bushes - 316 Stainless Steel

PART No.	DESCRIPTION
144049	8mm(1/4) X 6mm(1/8) 316 S/S Bush BSP
144050	10mm X 8mm(1/4) 316 S/S Bush BSP
144051	15mm X 8mm(1/4) 316 S/S Bush BSP
144052	15mm X 10mm 316 S/S Bush BSP
144053	20mm X 8mm(1/4) 316 S/S Bush BSP
144054	20mm X 15mm 316 S/S Bush BSP
144055	25mm X 8mm(1/4) 316 S/S Bush BSP
144056	25mm X 10mm 316 S/S Bush BSP
144057	25mm X 15mm 316 S/S Bush BSP
144058	25mm X 20mm 316 S/S Bush BSP
144059	32mm X 15mm 316 S/S Bush BSP
144060	32mm X 20mm 316 S/S Bush BSP
144061	32mm X 25mm 316 S/S Bush BSP
144062	40mm X 20mm 316 S/S Bush BSP
144063	40mm X 25mm 316 S/S Bush BSP
144064	40mm X 32mm 316 S/S Bush BSP
144065	50mm X 20mm 316 S/S Bush BSP
144066	50mm X 25mm 316 S/S Bush BSP
144067	50mm X 32mm 316 S/S Bush BSP
144068	50mm X 40mm 316 S/S Bush BSP
144069	65mm X 40mm 316 S/S Bush BSP
144070	65mm X 50mm 316 S/S Bush BSP
144071	80mm X 40mm 316 S/S Bush BSP
144072	80mm X 50mm 316 S/S Bush BSP
144073	80mm X 65mm 316 S/S Bush BSP
144074	100mm X 50mm 316 S/S Bush BSP
144075	100mm X 65mm 316 S/S Bush BSP
144076	100mm X 80mm 316 S/S Bush BSP

Fire Australia Co Pty Ltd.
ABN No. 13165523713
47 Rushdale St. Knoxfield VIC-3180. Tel:(03) 9764 0020, Fax: (03) 9764 0023.
E-mail : sales@fireausco.com.au www.fireausco.com.au

Sockets - 316 Stainless Steel

PART No.	DESCRIPTION
144077	6mm(1/8) 316 S/S Socket BSPP
144078	8mm(1/4) 316 S/S Socket BSPP
144079	10mm(3/8) 316 S/S Socket BSPP
144080	15mm 316 S/S Socket BSPP
144081	20mm 316 S/S Socket BSPP
144082	25mm 316 S/S Socket BSPP
144083	32mm 316 S/S Socket BSPP
144084	40mm 316 S/S Socket BSPP
144085	50mm 316 S/S Socket BSPP
144086	65mm 316 S/S Socket BSPP
144087	80mm 316 S/S Socket BSPP
144088	100mm 316 S/S Socket BSPP
144089	150mm 316 S/S Socket BSPP

Half Sockets - 316 Stainless Steel

PART No.	DESCRIPTION
144090	10mm(3/8) 316 S/S Half Socket BSPP
144091	15mm 316 S/S Half Socket BSPP
144092	20mm 316 S/S Half Socket BSPP
144093	25mm 316 S/S Half Socket BSPP
144094	32mm 316 S/S Half Socket BSPP
144095	40mm 316 S/S Half Socket BSPP
144096	50mm 316 S/S Half Socket BSPP

Sockets Reducing - 316 Stainless Steel

PART No.	DESCRIPTION
144097	10mm X 8mm(1/4) 316 S/S Reducing Socket BSP
144098	15mm X 8mm(1/4) 316 S/S Reducing Socket BSP
144099	15mm X 10mm 316 S/S Reducing Socket BSP
144100	20mm X 15mm 316 S/S Reducing Socket BSP
144101	25mm X 15mm 316 S/S Reducing Socket BSP
144102	25mm X 20mm 316 S/S Reducing Socket BSP
144103	32mm X 25mm 316 S/S Reducing Socket BSP
144104	40mm X 25mm 316 S/S Reducing Socket BSP
144105	40mm X 32mm 316 S/S Reducing Socket BSP
144106	50mm X 25mm 316 S/S Reducing Socket BSP
144107	50mm X 32mm 316 S/S Reducing Socket BSP
144108	50mm X 40mm 316 S/S Reducing Socket BSP
144109	65mm X 50mm 316 S/S Reducing Socket BSP
144110	80mm X 50mm 316 S/S Reducing Socket BSP
144111	80mm X 65mm 316 S/S Reducing Socket BSP
144112	100mm X 50mm 316 S/S Reducing Socket BSP
144113	100mm X 80mm 316 S/S Reducing Socket BSP

Fire Australia Co Pty Ltd.
ABN No. 13165523713
47 Rushdale St. Knoxfield VIC-3180. Tel:(03) 9764 0020, Fax: (03) 9764 0023.
E-mail : sales@fireausco.com.au www.fireausco.com.au

Elbows Female X Female 90 Deg - 316 Stainless Steel

PART No.	DESCRIPTION
144114	6mm(1/8) 316 S/S Elbow F/F 90 Deg BSP
144115	8mm(1/4) 316 S/S Elbow F/F 90 Deg BSP
144116	10mm 316 S/S Elbow F/F 90 Deg BSP
144105	15mm 316 S/S Elbow F/F 90 Deg BSP
144106	20mm 316 S/S Elbow F/F 90 Deg BSP
144107	25mm 316 S/S Elbow F/F 90 Deg BSP
144108	32mm 316 S/S Elbow F/F 90 Deg BSP
144109	40mm 316 S/S Elbow F/F 90 Deg BSP
144110	50mm 316 S/S Elbow F/F 90 Deg BSP
144111	65mm 316 S/S Elbow F/F 90 Deg BSP
144112	80mm 316 S/S Elbow F/F 90 Deg BSP
144113	100mm 316 S/S Elbow F/F 90 Deg BSP

Elbows Female X Female 45 Deg - 316 Stainless Steel

PART No.	DESCRIPTION
144126	8mm(1/4) 316 S/S Elbow F/F 45 Deg BSP
144127	10mm 316 S/S Elbow F/F 45 Deg BSP
144128	15mm 316 S/S Elbow F/F 45 Deg BSP
144129	20mm 316 S/S Elbow F/F 45 Deg BSP
144130	25mm 316 S/S Elbow F/F 45 Deg BSP
144131	32mm 316 S/S Elbow F/F 45 Deg BSP
144132	40mm 316 S/S Elbow F/F 45 Deg BSP
144133	50mm 316 S/S Elbow F/F 45 Deg BSP
144134	65mm 316 S/S Elbow F/F 45 Deg BSP
144135	80mm 316 S/S Elbow F/F 45 Deg BSP
144136	100mm 316 S/S Elbow F/F 45 Deg BSP

Elbows Male X Female 90 Deg - 316 Stainless Steel

PART No.	DESCRIPTION
144137	6mm(1/8) 316 S/s Elbow M/F 90 Deg BSP
144138	8mm(1/4) 316 S/S Elbow M/F 90 Deg BSP
144139	10mm 316 S/S Elbow M/F 90 Deg BSP
144114	15mm 316 S/S Elbow M/F 90 Deg BSP
144115	20mm 316 S/S Elbow M/F 90 Deg BSP
144116	25mm 316 S/S Elbow M/F 90 Deg BSP
144117	32mm 316 S/S Elbow M/F 90 Deg BSP
144118	40mm 316 S/S Elbow M/F 90 Deg BSP
144119	50mm 316 S/S Elbow M/F 90 Deg BSP
144120	65mm 316 S/S Elbow M/F 90 Deg BSP
144121	80mm 316 S/S Elbow M/F 90 Deg BSP
144122	100mm 316 S/S Elbow M/F 90 Deg BSP

Elbows - Male X Female 45 Deg - 316 Stainless Steel

PART No.	DESCRIPTION
144149	15mm 316 S/S Elbow M/F 45 Deg BSP
144150	20mm 316 S/S Elbow M/F 45 Deg BSP
144151	25mm 316 S/S Elbow M/F 45 Deg BSP
144152	32mm 316 S/S Elbow M/F 45 Deg BSP
144153	40mm 316 S/S Elbow M/F 45 Deg BSP
144154	50mm 316 S/S Elbow M/F 45 Deg BSP

Tees - 316 Stainless Steel

PART No.	DESCRIPTION
144155	6mm(1/8) 316 S/S Tee BSP
144156	8mm(1/4) 316 S/S Tee BSP
144157	10mm(3/8) 316 S/S Tee BSP
144158	15mm 316 S/S Tee BSP
144159	20mm 316 S/S Tee BSP
144160	25mm 316 S/S Tee BSP
144161	32mm 316 S/S Tee BSP
144162	40mm 316 S/S Tee BSP
144163	50mm 316 S/S Tee BSP
144164	65mm 316 S/S Tee BSP
144165	80mm 316 S/S Tee BSP
144166	100mm 316 S/S Tee BSP

Fire Australia Co Pty Ltd.
ABN No. 13165523713
47 Rushdale St. Knoxfield VIC-3180. Tel:(03) 9764 0020, Fax: (03) 9764 0023.
E-mail : sales@fireausco.com.au www.fireausco.com.au

FIRE AUSTRALIA CO

Unions Female X Female Metal Seat - 316 Stainless Steel

PART No.	DESCRIPTION
144167	8mm(1/4) 316 S/S Union F/F Metal/Metal Seat BSP
144168	10mm 316 S/S Union F/F Metal/Metal Seat BSP
144169	15mm 316 S/S Union F/F Metal/Metal Seat BSP
144170	20mm 316 S/S Union F/F Metal/Metal Seat BSP
144171	25mm 316 S/S Union F/F Metal/Metal Seat BSP
144172	32mm 316 S/S Union F/F Metal/Metal Seat BSP
144173	40mm 316 S/S Union F/F Metal/Metal Seat BSP
144174	50mm 316 S/S Union F/F Metal/Metal Seat BSP
144175	65mm 316 S/S Union F/F Metal/Metal Seat BSP
144176	80mm 316 S/S Union F/F Metal/Metal Seat BSP
144177	100mm 316 S/S Union F/F Metal/Metal Seat BSP

Unions Male X Female Metal Seat - 316 Stainless Steel

PART No.	DESCRIPTION
144178	8mm(1/4) 316 S/S Union M/F Metal/Metal Seat BSP
144179	10mm 316 S/S Union M/F Metal/Metal Seat BSP
144180	15mm 316 S/S Union M/F Metal/Metal Seat BSP
144181	20mm 316 S/S Union M/F Metal/Metal Seat BSP
144182	25mm 316 S/S Union M/F Metal/Metal Seat BSP
144183	32mm 316 S/S Union M/F Metal/Metal Seat BSP
144184	40mm 316 S/S Union M/F Metal/Metal Seat BSP
144185	50mm 316 S/S Union M/F Metal/Metal Seat BSP

Plugs Hex Head - 316 Stainless Steel

PART No.	DESCRIPTION
144186	6mm(1/8) 316 S/S Plug Hex Head BSP
144187	8mm(1/4) 316 S/S Plug Hex Head BSP
144188	10mm(3/8) 316 S/S Plug Hex Head BSP
144189	15mm 316 S/S Plug Hex Head BSP
144190	20mm 316 S/S Plug Hex Head BSP
144191	25mm 316 S/S Plug Hex Head BSP
144192	32mm 316 S/S Plug Hex Head BSP
144193	40mm 316 S/S Plug Hex Head BSP
144194	50mm 316 S/S Plug Hex Head BSP
144195	65mm 316 S/S Plug Hex Head BSP
144196	80mm 316 S/S Plug Hex Head BSP
144197	100mm 316 S/S Plug Hex Head BSP

Caps - 316 Stainless Steel

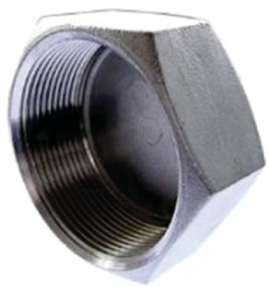

PART No.	DESCRIPTION
144198	15mm 316 S/S Cap BSP
144199	20mm 316 S/S Cap BSP
144200	25mm 316 S/S Cap BSP
144201	32mm 316 S/S Cap BSP
144202	40mm 316 S/S Cap BSP
144203	50mm 316 S/S Cap BSP
144204	65mm 316 S/S Cap BSP
144205	80mm 316 S/S Cap BSP
144206	100mm 316 S/S Cap BSP

Hose Barbs (Tails) Male Iron BSPT - 316 Stainless Steel

PART No.	DESCRIPTION
144207	8mm(1/4) 316 S/S M. I. BSP Hose Barb
144208	10mm 316 S/S M. I. BSP Hose Barb
144209	15mm 316 S/S M. I. BSP Hose Barb
144210	20mm 316 S/S M. I. BSP Hose Barb
144211	25mm 316 S/S M. I. BSP Hose Barb
144212	32mm 316 S/S M. I. BSP Hose Barb
144213	40mm 316 S/S M. I. BSP Hose Barb
144214	50mm 316 S/S M. I. BSP Hose Barb
144215	65mm 316 S/S M. I. BSP Hose Barb
144216	80mm 316 S/S M. I. BSP Hose Barb
144217	100mm 316 S/S M. I. BSP Hose Barb

Toe (Pipe) Nipple Threaded One End BSPT - 316 Stainless Steel

PART No.	DESCRIPTION
144218	8mm(1/4) 316 S/S Pipe Toe Nipple BSPT
144219	10mm 316 S/S Pipe Toe Nipple BSPT
144220	15mm 316 S/S Pipe Toe Nipple BSPT
144221	20mm 316 S/S Pipe Toe Nipple BSPT
144222	25mm 316 S/S Pipe Toe Nipple BSPT
144223	32mm 316 S/S Pipe Toe Nipple BSPT
144224	40mm 316 S/S Pipe Toe Nipple BSPT
144225	50mm 316 S/S Pipe Toe Nipple BSPT
144226	65mm 316 S/S Pipe Toe Nipple BSPT
144227	80mm 316 S/S Pipe Toe Nipple BSPT
144228	100mm 316 S/S Pipe Toe Nipple BSPT

Fire Australia Co Pty Ltd.
ABN No. 13165523713
47 Rushdale St. Knoxfield VIC-3180. Tel:(03) 9764 0020, Fax: (03) 9764 0023.
E-mail : sales@fireausco.com.au www.fireausco.com.au

FIRE AUSTRALIA CO

Toe Nipple (Tube) Threaded One End BSPT - 316 Stainless Steel

PART No.	DESCRIPTION
144229	12mm 316 S/S BSP Male Tube Toe Nipple
144230	19mm 316 S/S BSP Male Tube Toe Nipple
144231	25mm 316 S/S BSP Male Tube Toe Nipple
144232	32mm 316 S/S BSP Male Tube Toe Nipple
144233	38mm 316 S/S BSP Male Tube Toe Nipple
144234	50mm 316 S/S BSP Male Tube Toe Nipple
144235	63mm 316 S/S BSP Male Tube Toe Nipple
144236	76.1mm 316 S/S BSP Male Tube Toe Nipple
144237	101.6mm 316 S/S BSP Male Tube Toe Nipple

Pipe Pieces Screwed Both Ends BSPT - 316 Stainless Steel

PART No.	DESCRIPTION
144238	15mm X 100mm 316 S/S Sch 40 Pipe Piece BSPT
144239	15mm X 150mm 316 S/S Sch 40 Pipe Piece BSPT
144240	15mm X 200mm 316 S/S Sch 40 Pipe Piece BSPT
144241	15mm X 300mm 316 S/S Sch 40 Pipe Piece BSPT
144242	15mm X 600mm 316 S/S Sch 40 Pipe Piece BSPT
144243	20mm X 100mm 316 S/S Sch 40 Pipe Piece BSPT
144244	20mm X 150mm 316 S/S Sch 40 Pipe Piece BSPT
144245	20mm X 200mm 316 S/S Sch 40 Pipe Piece BSPT
144246	20mm X 300mm 316 S/S Sch 40 Pipe Piece BSPT
144247	20mm X 600mm 316 S/S Sch 40 Pipe Piece BSPT
144248	25mm X 100mm 316 S/S Sch 40 Pipe Piece BSPT
144249	25mm X 150mm 316 S/S Sch 40 Pipe Piece BSPT
144250	25mm X 200mm 316 S/S Sch 40 Pipe Piece BSPT
144251	25mm X 300mm 316 S/S Sch 40 Pipe Piece BSPT
144252	25mm X 600mm 316 S/S Sch 40 Pipe Piece BSPT
144253	32mm X 100mm 316 S/S Sch 40 Pipe Piece BSPT
144254	32mm X 150mm 316 S/S Sch 40 Pipe Piece BSPT
144255	32mm X 200mm 316 S/S Sch 40 Pipe Piece BSPT
144256	32mm X 300mm 316 S/S Sch 40 Pipe Piece BSPT
144257	32mm X 600mm 316 S/S Sch 40 Pipe Piece BSPT
144258	40mm X 100mm 316 S/S Sch 40 Pipe Piece BSPT
144259	40mm X 150mm 316 S/S Sch 40 Pipe Piece BSPT
144260	40mm X 200mm 316 S/S Sch 40 Pipe Piece BSPT
144261	40mm X 300mm 316 S/S Sch 40 Pipe Piece BSPT
144262	40mm X 450mm 316 S/S Sch 40 Pipe Piece BSPT
144263	40mm X 600mm 316 S/S Sch 40 Pipe Piece BSPT
144264	50mm X 100mm 316 S/S Sch 40 Pipe Piece BSPT
144265	50mm X 150mm 316 S/S Sch 40 Pipe Piece BSPT
144266	50mm X 200mm 316 S/S Sch 40 Pipe Piece BSPT
144267	50mm X 300mm 316 S/S Sch 40 Pipe Piece BSPT
144268	50mm X 450mm 316 S/S Sch 40 Pipe Piece BSPT
144269	50mm X 600mm 316 S/S Sch 40 Pipe Piece BSPT

SS BSM Hex Nut

PART No.	DESCRIPTION
212001	25mm BSM SS 304 Nut
212002	38mm BSM SS 304 Nut
212003	50mm BSM SS 304 Nut
212004	63mm BSM SS 304 Nut
212005	76mm BSM SS 304 Nut
212006	101mm BSM SS 304 Nut
212007	125mm BSM SS 304 Nut
212008	150mm BSM SS 304 Nut

BSM SS CIP Flat Face-Male Part

PART No.	DESCRIPTION
212009	25mm BSM SS 316 CIP Flat Face-Male Part
212010	38mm BSM SS 316 CIP Flat Face-Male Part
212011	50mm BSM SS 316 CIP Flat Face-Male Part
212012	63mm BSM SS 316 CIP Flat Face-Male Part
212013	76mm BSM SS 316 CIP Flat Face-Male Part
212014	101mm BSM SS 316 CIP Flat Face-Male Part
212015	125mm BSM SS 316 CIP Flat Face-Male Part
212016	150mm BSM SS 316 CIP Flat Face-Male Part

BSM SS RJT - Male Part

PART No.	DESCRIPTION
212017	25mm BSM SS 316 RJT-Male Part
212018	38mm BSM SS 316 RJT-Male Part
212019	50mm BSM SS 316 RJT-Male Part
212020	63mm BSM SS 316 RJT-Male Part
212021	76mm BSM SS 316 RJT-Male Part
212022	101mm BSM SS 316 RJT-Male Part
212023	150mm BSM SS 316 RJT-Male Part

BSM SS Blank Nut

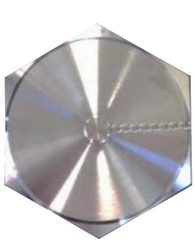

PART No.	DESCRIPTION
212024	25mm BSM SS 304 Blank Nut
212025	38mm BSM SS 304 Blank Nut
212026	50mm BSM SS 304 Blank Nut
212027	63mm BSM SS 304 Blank Nut
212028	76mm BSM SS 304 Blank Nut
212029	101mm BSM SS 304 Blank Nut
212030	150mm BSM SS 304 Blank Nut

BSM SS CIP Flat Face Liner

PART No.	DESCRIPTION
212031	25mm BSM SS 316 CIP Flat Face Liner
212032	38mm BSM SS 316 CIP Flat Face Liner
212033	50mm BSM SS 316 CIP Flat Face Liner
212034	63mm BSM SS 316 CIP Flat Face Liner
212035	76mm BSM SS 316 CIP Flat Face Liner
212036	101mm BSM SS 316 CIP Flat Face Liner
212037	125mm BSM SS 316 CIP Flat Face Liner
212038	150mm BSM SS 316 CIP Flat Face Liner

Fire Australia Co Pty Ltd.
ABN No. 13165523713
47 Rushdale St. Knoxfield VIC-3180. Tel:(03) 9764 0020, Fax: (03) 9764 0023.
E-mail : sales@fireausco.com.au www.fireausco.com.au

FIRE AUSTRALIA CO

BSM SS RJT Liner

PART No.	DESCRIPTION
212039	25mm BSM SS 316 RJT Liner
212040	38mm BSM SS 316 RJT Liner
212041	50mm BSM SS 316 RJT Liner
212042	63mm BSM SS 316 RJT Liner
212043	76mm BSM SS 316 RJT Liner
212044	101mm BSM SS 316 RJT Liner
212045	150mm BSM SS 316 RJT Liner

BSM Blank Caps

PART No.	DESCRIPTION
212046	12-18mm BSM SS 316 Pressed Caps
212047	25-38mm BSM SS 316 Pressed Caps
212048	50mm BSM SS 316 Pressed Caps
212049	63mm BSM SS 316 Pressed Caps
212050	76mm BSM SS 316 Pressed Caps
212051	101mm BSM SS 316 Pressed Caps
212052	125mm BSM SS 316 Pressed Caps
212053	150mm BSM SS 316 Pressed Caps

BSM O Ring RJT-EPDM Black

PART No.	DESCRIPTION
212054	25mm BSM O Ring RJT-EPDM Black
212055	38mm BSM O Ring RJT-EPDM Black
212056	50mm BSM O Ring RJT-EPDM Black
212057	63mm BSM O Ring RJT-EPDM Black
212058	76mm BSM O Ring RJT-EPDM Black
212059	101mm BSM O Ring RJT-EPDM Black
212060	150mm BSM O Ring RJT-EPDM Black

BSM O Ring RJT-Viton Black

PART No.	DESCRIPTION
212061	25mm BSM O Ring RJT-Viton Black
212062	38mm BSM O Ring RJT-Viton Black
212063	50mm BSM O Ring RJT-Viton Black
212064	63mm BSM O Ring RJT-Viton Black
212065	76mm BSM O Ring RJT-Viton Black
212066	101mm BSM O Ring RJT-Viton Black
212067	150mm BSM O Ring RJT-Viton Black

BSM O Ring RJT-Teflon White

PART No.	DESCRIPTION
212068	25mm BSM O Ring RJT-Teflon White
212069	38mm BSM O Ring RJT-Teflon White
212070	50mm BSM O Ring RJT-Teflon White
212071	63mm BSM O Ring RJT-Teflon White
212072	76mm BSM O Ring RJT-Teflon White
212073	101mm BSM O Ring RJT-Teflon White
212074	150mm BSM O Ring RJT-Teflon White

Fire Australia Co Pty Ltd.
ABN No. 13165523713
47 Rushdale St. Knoxfield VIC-3180. Tel:(03) 9764 0020, Fax: (03) 9764 0023.
E-mail : sales@fireausco.com.au www.fireausco.com.au

BSM O Ring RJT-Nitrile Black

PART No.	DESCRIPTION
212075	25mm BSM O Ring RJT-Nitrile Black
212076	38mm BSM O Ring RJT-Nitrile Black
212077	50mm BSM O Ring RJT-Nitrile Black
212078	63mm BSM O Ring RJT-Nitrile Black
212079	76mm BSM O Ring RJT-Nitrile Black
212080	101mm BSM O Ring RJT-Nitrile Black
212081	150mm BSM O Ring RJT-Nitrile Black

BSM O Ring RJT-Silicone Translucent

PART No.	DESCRIPTION
212082	25mm BSM O Ring RJT-Silicone Translucent
212083	38mm BSM O Ring RJT-Silicone Translucent
212084	50mm BSM O Ring RJT-Silicone Translucent
212085	63mm BSM O Ring RJT-Silicone Translucent
212086	76mm BSM O Ring RJT-Silicone Translucent
212087	101mm BSM O Ring RJT-Silicone Translucent
212088	150mm BSM O Ring RJT-Silicone Translucent

BSM CIP Flat Face-EPDM Black

PART No.	DESCRIPTION
212089	25mm BSM CIP Flat Face-EPDM Black
212090	38mm BSM CIP Flat Face-EPDM Black
212091	50mm BSM CIP Flat Face-EPDM Black
212092	63mm BSM CIP Flat Face-EPDM Black
212093	76mm BSM CIP Flat Face-EPDM Black
212094	101mm BSM CIP Flat Face-EPDM Black
212095	150mm BSM CIP Flat Face-EPDM Black

BSM CIP Flat Face-Viton Black

PART No.	DESCRIPTION
212096	25mm BSM CIP Flat Face-Viton Black
212097	38mm BSM CIP Flat Face-Viton Black
212098	50mm BSM CIP Flat Face-Viton Black
212099	63mm BSM CIP Flat Face-Viton Black
212100	76mm BSM CIP Flat Face-Viton Black
212101	101mm BSM CIP Flat Face-Viton Black
212102	150mm BSM CIP Flat Face-Viton Black

BSM CIP Flat Face-Teflon White

PART No.	DESCRIPTION
212103	25mm BSM CIP Flat Face-Teflon White
212104	38mm BSM CIP Flat Face-Teflon White
212105	50mm BSM CIP Flat Face-Teflon White
212106	63mm BSM CIP Flat Face-Teflon White
212107	76mm BSM CIP Flat Face-Teflon White
212108	101mm BSM CIP Flat Face-Teflon White
212109	150mm BSM CIP Flat Face-Teflon White

Fire Australia Co Pty Ltd.
ABN No. 13165523713
47 Rushdale St. Knoxfield VIC-3180. Tel:(03) 9764 0020, Fax: (03) 9764 0023.
E-mail : sales@fireausco.com.au www.fireausco.com.au

BSM CIP Flat Face-Nitrile Black

PART No.	DESCRIPTION
212110	25mm BSM CIP Flat Face-Nitrile Black
212111	38mm BSM CIP Flat Face-Nitrile Black
212112	50mm BSM CIP Flat Face-Nitrile Black
212113	63mm BSM CIP Flat Face-Nitrile Black
212114	76mm BSM CIP Flat Face-Nitrile Black
212115	101mm BSM CIP Flat Face-Nitrile Black
212116	150mm BSM CIP Flat Face-Nitrile Black

SS Ferrule Clamp Single Pin

PART No.	DESCRIPTION
212117	12-18mm SS 304 Ferrule Clamp Single Pin
212118	25-38mm SS 304 Ferrule Clamp Single Pin
212119	50mm SS 304 Ferrule Clamp Single Pin
212120	63mm SS 304 Ferrule Clamp Single Pin
212121	76mm SS 304 Ferrule Clamp Single Pin
212122	101mm SS 304 Ferrule Clamp Single Pin
212123	125mm SS 304 Ferrule Clamp Single Pin
212124	150mm SS 304 Ferrule Clamp Single Pin

SS - 316 Standard Ferrule 12mm High

PART No.	DESCRIPTION
212125	12mm SS 316 Ferrule 12mm High
212126	18mm SS 316 Ferrule 12mm High
212127	25mm SS 316 Ferrule 12mm High
212128	31mm SS 316 Ferrule 12mm High
212129	38mm SS 316 Ferrule 12mm High
212130	50mm SS 316 Ferrule 12mm High
212131	63mm SS 316 Ferrule 12mm High
212132	76mm SS 316 Ferrule 12mm High
212133	101mm SS 316 Ferrule 12mm High
212134	125mm SS 316 Ferrule 12mm High
212135	150mm SS 316 Ferrule 12mm High

SS 316 Ferrule Fitting End Cap

PART No.	DESCRIPTION
212136	12mm SS 316 Ferrule Fitting End Cap
212137	18mm SS 316 Ferrule Fitting End Cap
212138	25mm SS 316 Ferrule Fitting End Cap
212139	31mm SS 316 Ferrule Fitting End Cap
212140	38mm SS 316 Ferrule Fitting End Cap
212141	50mm SS 316 Ferrule Fitting End Cap
212142	63mm SS 316 Ferrule Fitting End Cap
212143	76mm SS 316 Ferrule Fitting End Cap
212144	101mm SS 316 Ferrule Fitting End Cap
212145	125mm SS 316 Ferrule Fitting End Cap
212146	150mm SS 316 Ferrule Fitting End Cap

Ferrule Seal - EPDM

PART No.	DESCRIPTION
212147	12mm Ferrule Seal - EPDM
212148	18mm Ferrule Seal - EPDM
212149	25mm Ferrule Seal - EPDM
212150	31mm Ferrule Seal - EPDM
212151	38mm Ferrule Seal - EPDM
212152	50mm Ferrule Seal - EPDM
212153	63mm Ferrule Seal - EPDM
212154	76mm Ferrule Seal - EPDM
212155	101mm Ferrule Seal - EPDM
212156	125mm Ferrule Seal - EPDM
212157	150mm Ferrule Seal - EPDM

Ferrule Seal - Buna

PART No.	DESCRIPTION
212158	12mm Ferrule Seal - Buna
212159	18mm Ferrule Seal - Buna
212160	25mm Ferrule Seal - Buna
212161	31mm Ferrule Seal - Buna
212162	38mm Ferrule Seal - Buna
212163	50mm Ferrule Seal - Buna
212164	63mm Ferrule Seal - Buna
212165	76mm Ferrule Seal - Buna
212166	101mm Ferrule Seal - Buna
212167	125mm Ferrule Seal - Buna
212168	150mm Ferrule Seal - Buna

Fire Australia Co Pty Ltd.
ABN No. 13165523713
47 Rushdale St. Knoxfield VIC-3180. Tel:(03) 9764 0020, Fax: (03) 9764 0023.
E-mail : sales@fireausco.com.au www.fireausco.com.au

Ferrule Seal - Teflon

PART No.	DESCRIPTION
212169	12mm Ferrule Seal - Teflon
212170	18mm Ferrule Seal - Teflon
212171	25mm Ferrule Seal - Teflon
212172	31mm Ferrule Seal - Teflon
212173	38mm Ferrule Seal - Teflon
212174	50mm Ferrule Seal - Teflon
212175	63mm Ferrule Seal - Teflon
212176	76mm Ferrule Seal - Teflon
212177	101mm Ferrule Seal - Teflon
212178	125mm Ferrule Seal - Teflon
212179	150mm Ferrule Seal - Teflon

Bush - Forged Brass

PART NO.	DESCRIPTION
211068	6mm X 3mm Brass Bush
211069	10mm X 3mm Brass Bush
211070	10mm X 6mm Brass Bush
211071	15mm X 3mm Brass Bush
211072	15mm X 6mm Brass Bush
211073	15mm X 10mm Brass Bush
211074	20mm X 3mm Brass Bush
211075	20mm X 6mm Brass Bush
211076	20mm X 15mm Brass Bush
211077	25mm X 15mm Brass Bush
211078	25mm X 20mm Brass Bush
211079	32mm X 15mm Brass Bush
211080	32mm X 20mm Brass Bush
211081	32mm X 25mm Brass Bush
211082	40mm X 20mm Brass Bush
211083	40mm X 25mm Brass Bush
211084	40mm X 32mm Brass Bush
211085	50mm X 20mm Brass Bush
211086	50mm X 25mm Brass Bush
211087	50mm X 32mm Brass Bush
211088	50mm X 40mm Brass Bush
211089	80mm X 65mm Brass Bush
211090	100mm X 50mm Brass Bush
211091	100mm X 65mm Brass Bush
211092	100mm X 80mm Brass Bush

M & F Adaptor - Brass

PART NO.	DESCRIPTION
211063	6mm M&F Brass Adaptor
211064	10mm M&F Brass Adaptor
211065	15mm M&F Brass Adaptor
211066	20mm M&F Brass Adaptor
211067	25mm M&F Brass Adaptor

Hex Cap - Brass

PART NO.	DESCRIPTION
211093	15mm Brass Hex Cap
211094	20mm Brass Hex Cap
211095	25mm Brass Hex Cap
211096	32mm Brass Hex Cap
211097	40mm Brass Hex Cap
211098	50mm Brass Hex Cap

F/F Elbow - Brass

PART NO.	DESCRIPTION
211099	3mm Brass F/F Elbow
211100	6mm Brass F/F Elbow
211101	10mm Brass F/F Elbow
211102	15mm Brass F/F Elbow
211103	20mm Brass F/F Elbow
211104	25mm Brass F/F Elbow
211105	32mm Brass F/F Elbow
211106	40mm Brass F/F Elbow
211107	50mm Brass F/F Elbow

Fire Australia Co Pty Ltd.
ABN No. 13165523713
47 Rushdale St. Knoxfield VIC-3180. Tel:(03) 9764 0020, Fax: (03) 9764 0023.
E-mail : sales@fireausco.com.au www.fireausco.com.au

FIRE AUSTRALIA CO

M/F Elbow - Brass

PART NO.	DESCRIPTION
211108	3mm Brass M/F Elbow
211109	6mm Brass M/F Elbow
211110	10mm Brass M/F Elbow
211111	15mm Brass M/F Elbow
211112	20mm Brass M/F Elbow
211113	25mm Brass M/F Elbow
211114	32mm Brass M/F Elbow
211115	40mm Brass M/F Elbow
211116	50mm Brass M/F Elbow

Lock Nut - Brass

PART NO.	DESCRIPTION
211117	3mm Brass Lock Nut
211118	6mm Brass Lock Nut
211119	10mm Brass Lock Nut
211120	15mm Brass Lock Nut
211121	20mm Brass Lock Nut
211122	25mm Brass Lock Nut
211123	32mm Brass Lock Nut
211124	40mm Brass Lock Nut
211125	50mm Brass Lock Nut

Hex Nipple BSPT - Brass

PART NO.	DESCRIPTION
211126	3mm Brass Hex Nipple-BSPT
211127	6mm Brass Hex Nipple-BSPT
211128	10mm Brass Hex Nipple-BSPT
211129	15mm Brass Hex Nipple-BSPT
211130	20mm Brass Hex Nipple-BSPT
211131	25mm Brass Hex Nipple-BSPT
211132	32mm Brass Hex Nipple-BSPT
211133	40mm Brass Hex Nipple-BSPT
211134	50mm Brass Hex Nipple-BSPT
211135	65mm Brass Hex Nipple-BSPT
211136	80mm Brass Hex Nipple-BSPT
211137	100mm Brass Hex Nipple-BSPT

All Thread BSPP Nipple - Brass

PART NO.	DESCRIPTION
211138	15mm X 150mm Brass Allthread Nipple-BSPP
211139	15mm X 300mm Brass Allthread Nipple-BSPP
211140	20mm X 150mm Brass Allthread Nipple-BSPP
211141	20mm X 300mm Brass Allthread Nipple-BSPP
211142	25mm X 150mm Brass Allthread Nipple-BSPP
211143	32mm X 150mm Brass Allthread Nipple-BSPP

Hex Reducing Nipple - Brass

PART NO.	DESCRIPTION
211144	6mm X 3mm Brass Hex Reducing Nipple-BSPT
211145	10mm X 3mm Brass Hex Reducing Nipple-BSPT
211146	10mm X 6mm Brass Hex Reducing Nipple-BSPT
211147	15mm X 6mm Brass Hex Reducing Nipple-BSPT
211148	15mm X 10mm Brass Hex Reducing Nipple-BSPT
211149	20mm X 15mm Brass Hex Reducing Nipple-BSPT
211150	25mm X 15mm Brass Hex Reducing Nipple-BSPT
211151	25mm X 20mm Brass Hex Reducing Nipple-BSPT
211152	32mm X 20mm Brass Hex Reducing Nipple-BSPT
211153	32mm X 25mm Brass Hex Reducing Nipple-BSPT
211154	40mm X 20mm Brass Hex Reducing Nipple-BSPT
211155	40mm X 25mm Brass Hex Reducing Nipple-BSPT
211156	40mm X 32mm Brass Hex Reducing Nipple-BSPT
211157	50mm X 15mm Brass Hex Reducing Nipple-BSPT
211158	50mm X 20mm Brass Hex Reducing Nipple-BSPT
211159	50mm X 25mm Brass Hex Reducing Nipple-BSPT
211160	50mm X 32mm Brass Hex Reducing Nipple-BSPT
211161	50mm X 40mm Brass Hex Reducing Nipple-BSPT
211162	65mm X 50mm Brass Hex Reducing Nipple-BSPT
211163	80mm X 50mm Brass Hex Reducing Nipple-BSPT
211164	80mm X 65mm Brass Hex Reducing Nipple-BSPT
211165	100mm X 50mm Brass Hex Reducing Nipple-BSPT
211166	100mm X 65mm Brass Hex Reducing Nipple-BSPT
211167	100mm X 80mm Brass Hex Reducing Nipple-BSPT

Hex Plug - Brass

PART NO.	DESCRIPTION
211168	3mm Brass Hex Plug
211169	6mm Brass Hex Plug
211170	10mm Brass Hex Plug
211171	15mm Brass Hex Plug
211172	20mm Brass Hex Plug
211173	25mm Brass Hex Plug
211174	32mm Brass Hex Plug
211175	40mm Brass Hex Plug
211176	50mm Brass Hex Plug
211177	65mm Brass Hex Plug
211178	80mm Brass Hex Plug
211179	100mm Brass Hex Plug

Hex Socket - Brass

PART NO.	DESCRIPTION
211180	3mm Brass Hex Socket
211181	6mm Brass Hex Socket
211182	10mm Brass Hex Socket
211183	15mm Brass Hex Socket
211184	20mm Brass Hex Socket
211185	25mm Brass Hex Socket
211186	32mm Brass Hex Socket
211187	40mm Brass Hex Socket
211188	50mm Brass Hex Socket

Fire Australia Co Pty Ltd.
ABN No. 13165523713
47 Rushdale St. Knoxfield VIC-3180. Tel:(03) 9764 0020, Fax: (03) 9764 0023.
E-mail : sales@fireausco.com.au www.fireausco.com.au

Reducing Socket - Brass

PART NO.	DESCRIPTION
211189	20mm X 15mm Brass Reducing Socket
211190	25mm X 20mm Brass Reducing Socket

Female Tee - Brass

PART NO.	DESCRIPTION
211191	3mm Brass Female Tee
211192	6mm Brass Female Tee
211193	10mm Brass Female Tee
211194	15mm Brass Female Tee
211195	20mm Brass Female Tee
211196	25mm Brass Female Tee
211197	32mm Brass Female Tee
211198	40mm Brass Female Tee
211199	50mm Brass Female Tee
211200	65mm Brass Female Tee

F/F Barrel Union - Brass

PART NO.	DESCRIPTION
211201	6mm Brass Female / Female Barrel Union
211202	10mm Brass Female / Female Barrel Union
211203	15mm Brass Female / Female Barrel Union
211204	20mm Brass Female / Female Barrel Union
211205	25mm Brass Female / Female Barrel Union
211206	32mm Brass Female / Female Barrel Union
211207	40mm Brass Female / Female Barrel Union
211208	50mm Brass Female / Female Barrel Union

M/F Barrel Union - Brass

PART NO.	DESCRIPTION
211209	6mm Brass Male / Female Barrel Union
211210	10mm Brass Male / Female Barrel Union
211211	15mm Brass Male / Female Barrel Union
211212	20mm Brass Male / Female Barrel Union
211213	25mm Brass Male / Female Barrel Union
211214	32mm Brass Male / Female Barrel Union
211215	40mm Brass Male / Female Barrel Union
211216	50mm Brass Male / Female Barrel Union

STANDARD WEIGHT BUTTWELD FITTINGS

Elbows - Long Radius 90 Deg

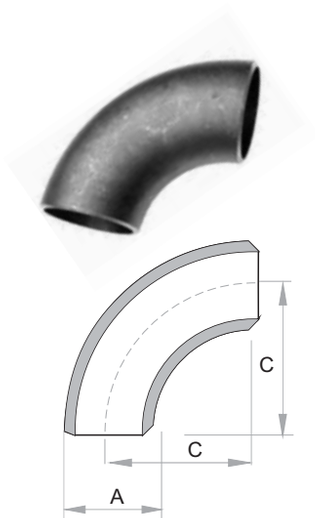

PART No.	DESCRIPTION	A	C
145001	15mm Buttweld CS Std Wt L/R Elbow 90 Deg	21.3	38.1
145002	20mm Buttweld CS Std Wt L/R Elbow 90 Deg	26.7	38.1
145003	25mm Buttweld CS Std Wt L/R Elbow 90 Deg	33.4	38.1
145004	32mm Buttweld CS Std Wt L/R Elbow 90 Deg	42.2	47.8
145005	40mm Buttweld CS Std Wt L/R Elbow 90 Deg	48.3	57.2
145006	50mm Buttweld CS Std Wt L/R Elbow 90 Deg	60.3	76.2
145007	65mm Buttweld CS Std Wt L/R Elbow 90 Deg	73	95.2
145008	80mm Buttweld CS Std Wt L/R Elbow 90 Deg	88.9	114.3
145009	100mm Buttweld CS Std Wt L/R Elbow 90 Deg	114.3	152.4
145010	125mm Buttweld CS Std Wt L/R Elbow 90 Deg	141.3	190.5
145011	150mm Buttweld CS Std Wt L/R Elbow 90 Deg	168.3	228.6
145012	200mm Buttweld CS Std Wt L/R Elbow 90 Deg	219.1	304.8
145013	250mm Buttweld CS Std Wt L/R Elbow 90 Deg	273.1	381
145014	300mm Buttweld CS Std Wt L/R Elbow 90 Deg	323.9	457.2
145015	350mm Buttweld CS Std Wt L/R Elbow 90 Deg	355.6	533
145016	400mm Buttweld CS Std Wt L/R Elbow 90 Deg	406.4	610
145017	450mm Buttweld CS Std Wt L/R Elbow 90 Deg	457	686
145018	500mm Buttweld CS Std Wt L/R Elbow 90 Deg	508	762
145019	600mm Buttweld CS Std Wt L/R Elbow 90 Deg	610	914

Elbows - Short Radius 90 Deg

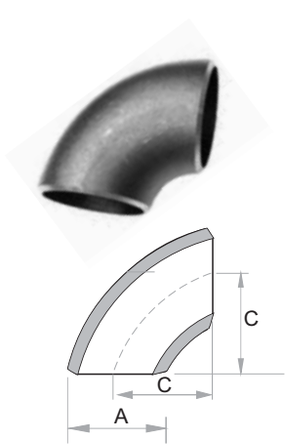

PART No.	DESCRIPTION	A	C
145020	25mm Buttweld CS Std Wt S/R Elbow 90 Deg	33.4	25.4
145021	32mm Buttweld CS Std Wt S/R Elbow 90 Deg	42.2	31.8
145022	40mm Buttweld CS Std Wt S/R Elbow 90 Deg	48.3	38.1
145023	50mm Buttweld CS Std Wt S/R Elbow 90 Deg	60.3	50.8
145024	65mm Buttweld CS Std Wt S/R Elbow 90 Deg	73	63.5
145025	80mm Buttweld CS Std Wt S/R Elbow 90 Deg	88.9	76.2
145026	100mm Buttweld CS Std Wt S/R Elbow 90 Deg	114.3	101.6
145027	125mm Buttweld CS Std Wt S/R Elbow 90 Deg	141.3	127
145028	150mm Buttweld CS Std Wt S/R Elbow 90 Deg	168.3	152.4
145029	200mm Buttweld CS Std Wt S/R Elbow 90 Deg	219.1	203.2
145030	250mm Buttweld CS Std Wt S/R Elbow 90 Deg	273.1	254
145031	300mm Buttweld CS Std Wt S/R Elbow 90 Deg	323.9	304.8

Fire Australia Co Pty Ltd.
ABN No. 13165523713
47 Rushdale St. Knoxfield VIC-3180. Tel:(03) 9764 0020, Fax: (03) 9764 0023.
E-mail : sales@fireausco.com.au www.fireausco.com.au

FIRE AUSTRALIA CO

STANDARD WEIGHT BUTTWELD FITTINGS

Elbows - Long Radius 45 Deg

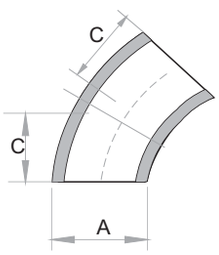

PART No.	DESCRIPTION	A	C
145032	15mm Buttweld CS Std Wt Elbow 45 Deg	21.3	15.7
145033	20mm Buttweld CS Std Wt Elbow 45 Deg	26.7	19
145034	25mm Buttweld CS Std Wt Elbow 45 Deg	33.4	22.4
145035	32mm Buttweld CS Std Wt Elbow 45 Deg	42.2	25.4
145036	40mm Buttweld CS Std Wt Elbow 45 Deg	48.3	28.4
145037	50mm Buttweld CS Std Wt Elbow 45 Deg	60.3	35.1
145038	65mm Buttweld CS Std Wt Elbow 45 Deg	73	44.4
145039	80mm Buttweld CS Std Wt Elbow 45 Deg	88.9	50.8
145040	90mm Buttweld CS Std Wt Elbow 45 Deg		
145041	100mm Buttweld CS Std Wt Elbow 45 Deg	114.3	63.5
145042	125mm Buttweld CS Std Wt Elbow 45 Deg	141.3	79.3
145043	150mm Buttweld CS Std Wt Elbow 45 Deg	168.3	95.2
145044	200mm Buttweld CS Std Wt Elbow 45 Deg	219.1	127
145045	250mm Buttweld CS Std Wt Elbow 45 Deg	273.1	158.8
145046	300mm Buttweld CS Std Wt Elbow 45 Deg	323.9	190.5
145047	350mm Buttweld CS Std Wt Elbow 45 Deg	355.6	222
145048	400mm Buttweld CS Std Wt Elbow 45 Deg	406.4	254
145049	450mm Buttweld CS Std Wt Elbow 45 Deg	457	286
145050	500mm Buttweld CS Std Wt Elbow 45 Deg	508	318
145051	600mm Buttweld CS Std Wt Elbow 45 Deg	610	381

Elbows - Long Radius 180 Deg

PART No.	DESCRIPTION
145052	20mm Buttweld CS Std Wt L/R Elbow 180 Deg
145053	25mm Buttweld CS Std Wt L/R Elbow 180 Deg
145054	32mm Buttweld CS Std Wt L/R Elbow 180 Deg
145055	40mm Buttweld CS Std Wt L/R Elbow 180 Deg
145056	50mm Buttweld CS Std Wt L/R Elbow 180 Deg
145057	65mm Buttweld CS Std Wt L/R Elbow 180 Deg
145058	80mm Buttweld CS Std Wt L/R Elbow 180 Deg
145059	100mm Buttweld CS Std Wt L/R Elbow 180 Deg

Fire Australia Co Pty Ltd.
ABN No. 13165523713
47 Rushdale St. Knoxfield VIC-3180. Tel:(03) 9764 0020, Fax: (03) 9764 0023.
E-mail : sales@fireausco.com.au www.fireausco.com.au

STANDARD WEIGHT BUTTWELD FITTINGS

Concentric Reducers

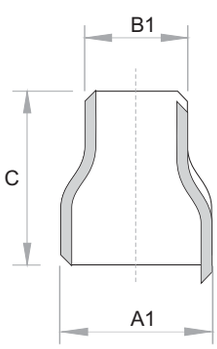

PART No.	DESCRIPTION	A1	B1	C
145060	20mm X 15mm Buttweld CS Std Wt Con Reducer	26.7	21.3	38.1
145061	25mm X 15mm Buttweld CS Std Wt Con Reducer	33.4	21.3	50.8
145062	25mm X 20mm Buttweld CS Std Wt Con Reducer	33.4	26.7	50.8
145063	32mm X 15mm Buttweld CS Std Wt Con Reducer	42.2	21.3	50.8
145064	32mm X 20mm Buttweld CS Std Wt Con Reducer	42.2	26.7	50.8
145065	32mm X 25mm Buttweld CS Std Wt Con Reducer	42.2	33.4	50.8
145066	40mm X 15mm Buttweld CS Std Wt Con Reducer	48.3	21.3	63.5
145067	40mm X 20mm Buttweld CS Std Wt Con Reducer	48.3	26.7	63.5
145068	40mm X 25mm Buttweld CS Std Wt Con Reducer	48.3	33.4	63.5
145069	40mm X 32mm Buttweld CS Std Wt Con Reducer	48.3	42.2	63.5
145070	50mm X 20mm Buttweld CS Std Wt Con Reducer	60.3	26.7	76.2
145071	50mm X 25mm Buttweld CS Std Wt Con Reducer	60.3	33.4	76.2
145072	50mm X 32mm Buttweld CS Std Wt Con Reducer	60.3	42.2	76.2
145073	50mm X 40mm Buttweld CS Std Wt Con Reducer	60.3	48.3	76.2
145074	65mm X 25mm Buttweld CS Std Wt Con Reducer	73	33.4	88.9
145075	65mm X 32mm Buttweld CS Std Wt Con Reducer	73	42.2	88.9
145076	65mm X 40mm Buttweld CS Std Wt Con Reducer	73	48.3	88.9
145077	65mm X 50mm Buttweld CS Std Wt Con Reducer	73	60.3	88.9
145078	80mm X 25mm Buttweld CS Std Wt Con Reducer	88.9	33.4	88.9
145079	80mm X 32mm Buttweld CS Std Wt Con Reducer	88.9	42.2	88.9
145080	80mm X 40mm Buttweld CS Std Wt Con Reducer	88.9	48.3	88.9
145081	80mm X 50mm Buttweld CS Std Wt Con Reducer	88.9	60.3	88.9
145082	80mm X 65mm Buttweld CS Std Wt Con Reducer	88.9	73	88.9
145083	100mm X 50mm Buttweld CS Std Wt Con Reducer	114.3	60.3	101.6
145084	100mm X 65mm Buttweld CS Std Wt Con Reducer	114.3	73	101.6
145085	100mm X 80mm Buttweld CS Std Wt Con Reducer	114.3	88.9	101.6
145086	125mm X 80mm Buttweld CS Std Wt Con Reducer	141.3	88.9	127
145087	125mm X 100mm Buttweld CS Std Wt Con Reducer	141.3	114.3	127
145088	150mm X 65mm Buttweld CS Std Wt Con Reducer	168.3	73	139.7
145089	150mm X 80mm Buttweld CS Std Wt Con Reducer	168.3	88.9	139.7
145090	150mm X 100mm Buttweld CS Std Wt Con Reducer	168.3	114.3	139.7
145091	150mm X 125mm Buttweld CS Std Wt Con Reducer	168.3	141.3	139.7
145092	200mm X 100mm Buttweld CS Std Wt Con Reducer	219.1	114.3	152.4
145093	200mm X 125mm Buttweld CS Std Wt Con Reducer	219.1	141.3	152.4
145094	200mm X 150mm Buttweld CS Std Wt Con Reducer	219.1	168.3	152.4
145095	250mm X 150mm Buttweld CS Std Wt Con Reducer	273.1	168.3	177.8
145096	250mm X 200mm Buttweld CS Std Wt Con Reducer	273.1	219.1	177.8
145097	300mm X 200mm Buttweld CS Std Wt Con Reducer	323.9	219.1	203.2
145098	300mm X 250mm Buttweld CS Std Wt Con Reducer	323.9	273.1	203.2
145099	350mm X 250mm Buttweld CS Std Wt Con Reducer	355.6	273.1	330
145100	350mm X 300mm Buttweld CS Std Wt Con Reducer	355.6	323.9	330
145101	400mm X 300mm Buttweld CS Std Wt Con Reducer	406.4	323.9	356
145102	400mm X 350mm Buttweld CS Std Wt Con Reducer	406.4	355.6	356
145103	500mm X 400mm Buttweld CS Std Wt Con Reducer	508	406.4	508
145104	500mm X 450mm Buttweld CS Std Wt Con Reducer	508	457	508
145105	600mm X 450mm Buttweld CS Std Wt Con Reducer	590.9	457	508
145106	600mm X 500mm Buttweld CS Std Wt Con Reducer	590.9	508	508

Fire Australia Co Pty Ltd.
ABN No. 13165523713
47 Rushdale St. Knoxfield VIC-3180. Tel:(03) 9764 0020, Fax: (03) 9764 0023.
E-mail : sales@fireausco.com.au www.fireausco.com.au

FIRE AUSTRALIA CO

STANDARD WEIGHT BUTTWELD FITTINGS

Eccentric Reducers

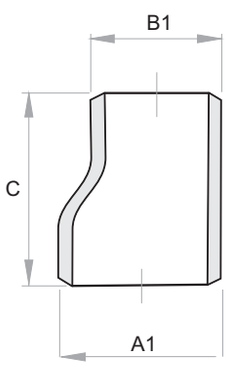

PART No.	DESCRIPTION	A1	B1	C
145107	25mm X 15mm Buttweld CS Std Wt Ecc Reducer	33.7	21.3	50.8
145108	25mm X 20mm Buttweld CS Std Wt Ecc Reducer	33.7	26.7	50.8
145109	32mm X 25mm Buttweld CS Std Wt Ecc Reducer	42.2	33.7	50.8
145110	40mm X 15mm Buttweld CS Std Wt Ecc Reducer	48.3	21.3	63.5
145111	40mm X 20mm Buttweld CS Std Wt Ecc Reducer	48.3	26.7	63.5
145112	40mm X 25mm Buttweld CS Std Wt Ecc Reduce	48.3	33.7	63.5
145113	40mm X 32mm Buttweld CS Std Wt Ecc Reducer	48.3	42.2	63.5
145114	50mm X 25mm Buttweld CS Std Wt Ecc Reducer	60.3	33.7	76.2
145115	50mm X 32mm Buttweld CS Std Wt Ecc Reducer	60.3	42.2	76.2
145116	50mm X 40mm Buttweld CS Std Wt Ecc Reducer	60.3	48.3	76.2
145117	65mm X 40mm Buttweld CS Std Wt Ecc Reducer	73	48.3	88.9
145118	65mm X 50mm Buttweld CS Std Wt Ecc Reducer	73	60.3	88.9
145119	80mm X 50mm Buttweld CS Std Wt Ecc Reducer	88.9	60.3	88.9
145120	80mm X 65mm Buttweld CS Std Wt Ecc Reducer	88.9	73	88.9
145121	100mm X 50mm Buttweld CS Std Wt Ecc Reducer	114.3	60.3	101.6
145122	100mm X 65mm Buttweld CS Std Wt Ecc Reducer	114.3	73	101.6
145123	100mm X 80mm Buttweld CS Std Wt Ecc Reducer	114.3	88.9	101.6
145124	125mm X 100mm Buttweld CS Std Wt Ecc Reducer	141.3	114.3	127
145125	150mm X 80mm Buttweld CS Std Wt Ecc Reducer	168.3	88.9	139.7
145126	150mm X 100mm Buttweld CS Std Wt Ecc Reducer	168.3	114.3	139.7
145127	150mm X 125mm Buttweld CS Std Wt Ecc Reducer	168.3	141.3	139.7
145128	200mm X 100mm Buttweld CS Std Wt Ecc Reducer	219.1	114.3	152.4
145129	200mm X 125mm Buttweld CS Std Wt Ecc Reducer	219.1	141.3	152.4
145130	200mm X 150mm Buttweld CS Std Wt Ecc Reducer	219.1	168.3	152.4
145131	250mm X 150mm Buttweld CS Std Wt Ecc Reducer	273.1	168.3	177.8
145132	250mm X 200mm Buttweld CS Std Wt Ecc Reducer	273.1	219.1	177.8
145133	300mm X 200mm Buttweld CS Std Wt Ecc Reducer	323.9	219.1	203.2
145134	300mm X 250mm Buttweld CS Std Wt Ecc Reducer	323.9	273.1	203.2

Fire Australia Co Pty Ltd.
ABN No. 13165523713
47 Rushdale St. Knoxfield VIC-3180. Tel:(03) 9764 0020, Fax: (03) 9764 0023.
E-mail : sales@fireausco.com.au www.fireausco.com.au

STANDARD WEIGHT BUTTWELD FITTINGS

Tees - Reducing

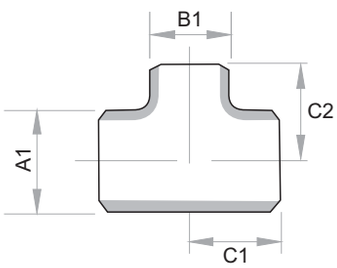

PART No.	DESCRIPTION	A1	B1	C1	C2
145135	50mm X 25mm Buttweld CS Std Wt Tee Reducing	60.3	33.4	63.5	63.5
145136	50mm X 40mm Buttweld CS Std Wt Tee Reducing	60.3	48.3	63.5	63.5
145137	65mm X 50mm Buttweld CS Std Wt Tee Reducing	73	60.3	76.2	69.8
145138	80mm X 50mm Buttweld CS Std Wt Tee Reducing	88.9	60.3	85.9	82.6
145139	80mm X 65mm Buttweld CS Std Wt Tee Reducing	88.9	73	85.9	82.6
145140	100mm X 50mm Buttweld CS Std Wt Tee Reducing	114.3	60.3	85.9	98.6
145141	100mm X 80mm Buttweld CS Std Wt Tee Reducing	114.3	88.9	104.6	98.6
145142	150mm X 100mm Buttweld CS Std Wt Tee Reducing	168.3	114.3	142.7	130
145143	200mm X 150mm Buttweld CS Std Wt Tee Reducing	219.1	168.3	177.8	168.1

Tees - Equal

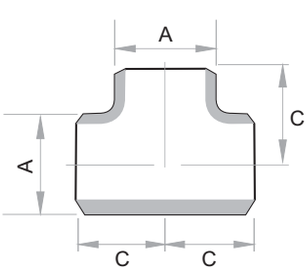

PART NO.	DESCRIPTION	A	C
145144	15mm Buttweld CS Std Wt Tee	22	25
145145	20mm Buttweld CS Std Wt Tee	26.7	28.4
145146	25mm Buttweld CS Std Wt Tee	33.4	38.1
145147	32mm Buttweld CS Std Wt Tee	42.2	47.8
145148	40mm Buttweld CS Std Wt Tee	48.3	57.2
145149	50mm Buttweld CS Std Wt Tee	60.3	63.5
145150	65mm Buttweld CS Std Wt Tee	73	76.2
145151	80mm Buttweld CS Std Wt Tee	88.9	85.9
145152	100mm Buttweld CS Std Wt Tee	114.3	104.6
145153	125mm Buttweld CS Std Wt Tee	141.3	124
145154	150mm Buttweld CS Std Wt Tee	168.3	142.7
145155	200mm Buttweld CS Std Wt Tee	219.1	177.8
145156	250mm Buttweld CS Std Wt Tee	273.1	215.9
145157	300mm Buttweld CS Std Wt Tee	323.9	254
145158	350mm Buttweld CS Std Wt Tee	355.6	279
145159	400mm Buttweld CS Std Wt Tee	406.4	305
145160	450mm Buttweld CS Std Wt Tee	457.0	343
145161	500mm Buttweld CS Std Wt Tee	508	381
145162	600mm Buttweld CS Std Wt Tee	610	432

Fire Australia Co Pty Ltd.
ABN No. 13165523713
47 Rushdale St. Knoxfield VIC-3180. Tel:(03) 9764 0020, Fax: (03) 9764 0023.
E-mail : sales@fireausco.com.au www.fireausco.com.au

FIRE AUSTRALIA CO

STANDARD WEIGHT BUTTWELD FITTINGS

Caps

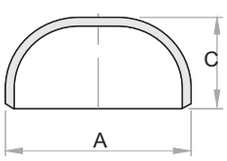

PART NO.	DESCRIPTION	A	C
145163	15mm Buttweld CS Std Wt Cap	22	38.1
145164	20mm Buttweld CS Std Wt Cap	26.2	38.1
145165	25mm Buttweld CS Std Wt Cap	33.4	38.1
145166	32mm Buttweld CS Std Wt Cap	42.2	38.1
145167	40mm Buttweld CS Std Wt Cap	48.3	38.1
145168	50mm Buttweld CS Std Wt Cap	60.3	38.1
145169	65mm Buttweld CS Std Wt Cap	73	38.1
145170	80mm Buttweld CS Std Wt Cap	88.9	50.8
145171	100mm Buttweld CS Std Wt Cap	114.3	63.5
145172	125mm Buttweld CS Std Wt Cap	141.3	76.2
145173	150mm Buttweld CS Std Wt Cap	168.3	88.9
145174	200mm Buttweld CS Std Wt Cap	219.1	101.6
145175	250mm Buttweld CS Std Wt Cap	273.1	127
145176	300mm Buttweld CS Std Wt Cap	323.9	152
145177	350mm Buttweld CS Std Wt Cap	355.6	165

Fire Australia Co Pty Ltd.
ABN No. 13165523713
47 Rushdale St. Knoxfield VIC-3180. Tel:(03) 9764 0020, Fax: (03) 9764 0023.
E-mail : sales@fireausco.com.au www.fireausco.com.au

SGP BUTTWELD FITTINGS - JIS B2311

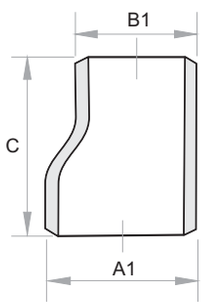

Eccentric Reducer

PART No.	DESCRIPTION	A1	B1	C
145182	80mm X 65mm Buttweld CS SGP Ecc Reducer	89.1	76.3	88.9
145183	100mm X 80mm Buttweld CS SGP Ecc Reducer	114.3	89.1	101.6
145184	150mm X 100mm Buttweld CS SGP Ecc Reducer	165.2	114.3	139.7

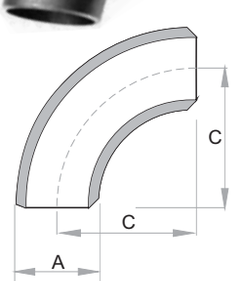

Elbows - Long Radius 90 Deg

PART No.	DESCRIPTION	A	C
145185	50mm Buttweld CS SGP L/R Elbow 90 Deg	60.5	76.2
145186	65mm Buttweld CS SGP L/R Elbow 90 Deg	76.3	95.3
145187	80mm Buttweld CS SGP L/R Elbow 90 Deg	89.1	114.3
145188	100mm Buttweld CS SGP L/R Elbow 90 Deg	114.3	152.4
145189	125mm Buttweld CS SGP L/R Elbow 90 Deg	139.8	190.5
145190	150mm Buttweld CS SGP L/R Elbow 90 Deg	165.2	228.6
145191	200mm Buttweld CS SGP L/R Elbow 90 Deg	216.3	304.8

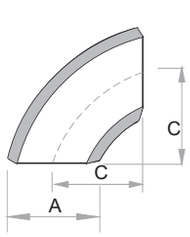

Elbows - Short Radius 90 Deg

PART No.	DESCRIPTION	A	C
145192	50mm Buttweld CS SGP S/R Elbow 90 Deg	60.5	50.8
145193	65mm Buttweld CS SGP S/R Elbow 90 Deg	76.3	63.5
145194	80mm Buttweld CS SGP S/R Elbow 90 Deg	89.1	76.2
145195	100mm Buttweld CS SGP S/R Elbow 90 Deg	114.3	101.6
145196	125mm Buttweld CS SGP S/R Elbow 90 Deg	139.8	127
145197	150mm Buttweld CS SGP S/R Elbow 90 Deg	165.2	152.4
145198	200mm Buttweld CS SGP S/R Elbow 90 Deg	216.3	203.2

Fire Australia Co Pty Ltd.
ABN No. 13165523713
47 Rushdale St. Knoxfield VIC-3180. Tel:(03) 9764 0020, Fax: (03) 9764 0023.
E-mail : sales@fireausco.com.au www.fireausco.com.au

FIRE AUSTRALIA CO

SGP BUTTWELD FITTINGS - JIS B2311

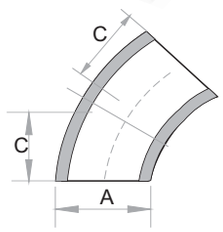

Elbows - Long Radius 45 Deg

PART No.	DESCRIPTION							A	C
145199	50mm	Buttweld	CS	SGP	Elbow	45	Deg	60.5	31.6
145200	65mm	Buttweld	CS	SGP	Elbow	45	Deg	76.3	69.5
145201	80mm	Buttweld	CS	SGP	Elbow	45	Deg	89.1	47.3
145202	100mm	Buttweld	CS	SGP	Elbow	45	Deg	114.3	63.1
145203	125mm	Buttweld	CS	SGP	Elbow	45	Deg	139.8	78.9
145204	150mm	Buttweld	CS	SGP	Elbow	45	Deg	165.2	94.7
145205	200mm	Buttweld	CS	SGP	Elbow	45	Deg	216.3	126.3

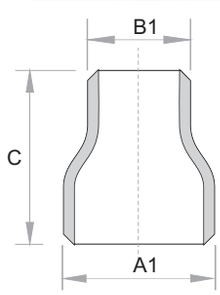

Concentric Reducers

PART No.	DESCRIPTION		A1	B1	C
145206	65mm X 50mm	Buttweld CS SGP Con Reducer	76.3	60.5	88.9
145207	80mm X 50mm	Buttweld CS SGP Con Reducer	89.1	60.5	88.9
145208	80mm X 65mm	Buttweld CS SGP Con Reducer	89.1	76.3	88.9
145209	100mm X 50mm	Buttweld CS SGP Con Reducer	114.3	60.5	101.6
145210	100mm X 65mm	Buttweld CS SGP Con Reducer	114.3	76.3	101.6
145211	100mm X 80mm	Buttweld CS SGP Con Reducer	114.3	89.1	101.6
145212	150mm X 65mm	Buttweld CS SGP Con Reducer	165.2	76.3	139.7
145213	150mm X 80mm	Buttweld CS SGP Con Reducer	165.2	89.1	139.7
145214	150mm X 100mm	Buttweld CS SGP Con Reducer	165.2	114.3	139.7
145215	150mm X 125mm	Buttweld CS SGP Con Reducer	165.2	139.8	139.7
145216	200mm X 150mm	Buttweld CS SGP Con Reducer	216.3	165.2	152.4

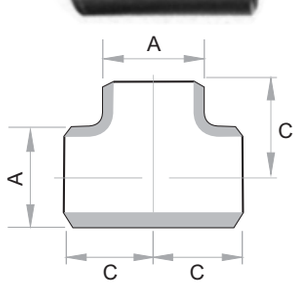

Tees

PART No.	DESCRIPTION					A	C
145217	50mm	Buttweld	CS	SGP	Tee	60.5	63.5
145218	65mm	Buttweld	CS	SGP	Tee	76.3	76.2
145219	80mm	Buttweld	CS	SGP	Tee	89.1	85.7
145220	100mm	Buttweld	CS	SGP	Tee	114.3	104.8
145221	125mm	Buttweld	CS	SGP	Tee	139.8	123.8
145222	150mm	Buttweld	CS	SGP	Tee	165.2	142.9
145223	200mm	Buttweld	CS	SGP	Tee	216.3	177.8

EXTRA STRONG BUTTWELD FITTINGS

Elbows - Long Radius 90 Deg

PART NO.	DESCRIPTION	A	C
145224	15mm Buttweld CS XS L/R Elbow 90 Deg	21.3	38.1
145225	20mm Buttweld CS XS L/R Elbow 90 Deg	26.7	38.1
145226	25mm Buttweld CS XS L/R Elbow 90 Deg	33.4	38.1
145227	32mm Buttweld CS XS L/R Elbow 90 Deg	42.2	47.8
145228	40mm Buttweld CS XS L/R Elbow 90 Deg	48.3	57.2
145229	50mm Buttweld CS XS L/R Elbow 90 Deg	60.3	76.2
145230	65mm Buttweld CS XS L/R Elbow 90 Deg	73	95.2
145231	80mm Buttweld CS XS L/R Elbow 90 Deg	88.9	114.3
145232	100mm Buttweld CS XS L/R Elbow 90 Deg	114.3	152.4
145233	125mm Buttweld CS XS L/R Elbow 90 Deg	141.3	190.5
145234	150mm Buttweld CS XS L/R Elbow 90 Deg	168.3	228.6
145235	200mm Buttweld CS XS L/R Elbow 90 Deg	219.1	304.8
145236	250mm Buttweld CS XS L/R Elbow 90 Deg	273.1	381
145237	300mm Buttweld CS XS L/R Elbow 90 Deg	323.9	457.2

Elbows - Short Radius 90 Deg

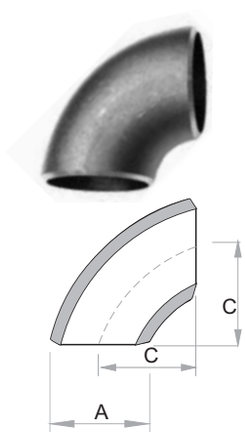

PART NO.	DESCRIPTION	A	C
145238	40mm Buttweld CS XS S/R Elbow 90 Deg	48.3	38.1
145239	50mm Buttweld CS XS S/R Elbow 90 Deg	60.3	50.8
145240	65mm Buttweld CS XS S/R Elbow 90 Deg	73	63.5
145241	80mm Buttweld CS XS S/R Elbow 90 Deg	88.9	76.2
145242	100mm Buttweld CS XS S/R Elbow 90 Deg	114.3	101.6
145243	150mm Buttweld CS XS S/R Elbow 90 Deg	168.3	152.4
145244	200mm Buttweld CS XS S/R Elbow 90 Deg	219.1	304.8

Elbows - Long Radius 45 Deg

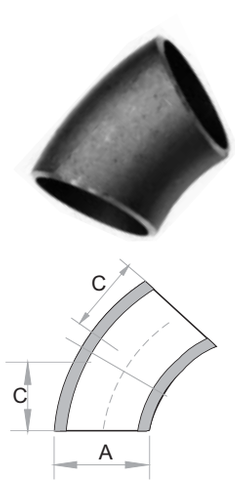

PART NO.	DESCRIPTION	A	C
145245	15mm Buttweld CS XS L/R Elbow 45 Deg		21.3
145246	20mm Buttweld CS XS L/R Elbow 45 Deg	26.7	19
145247	25mm Buttweld CS XS L/R Elbow 45 Deg	33.4	22.4
145248	32mm Buttweld CS XS L/R Elbow 45 Deg	42.2	25.4
145249	40mm Buttweld CS XS L/R Elbow 45 Deg	48.3	28.4
145250	50mm Buttweld CS XS L/R Elbow 45 Deg	60.3	35.1
145251	65mm Buttweld CS XS L/R Elbow 45 Deg	73	44.4
145252	80mm Buttweld CS XS L/R Elbow 45 Deg	88.9	50.8
145253	100mm Buttweld CS XS L/R Elbow 45 Deg	114.3	63.5
145254	150mm Buttweld CS XS L/R Elbow 45 Deg	168.3	95.2

Fire Australia Co Pty Ltd.
ABN No. 13165523713
47 Rushdale St. Knoxfield VIC-3180. Tel:(03) 9764 0020, Fax: (03) 9764 0023.
E-mail : sales@fireausco.com.au www.fireausco.com.au

FIRE AUSTRALIA CO

EXTRA STRONG BUTTWELD FITTINGS

Tees

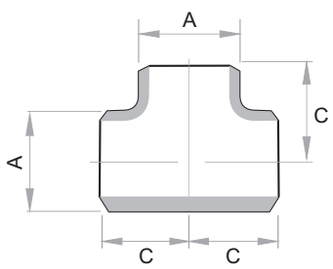

PART NO.	DESCRIPTION	A	C
145255	15mm Buttweld CS XS TEE	21.3	25
145256	20mm Buttweld CS XS TEE	26.7	28.4
145257	25mm Buttweld CS XS TEE	33.4	38.1
145258	32mm Buttweld CS XS TEE	42.2	47.8
145259	40mm Buttweld CS XS TEE	48.3	57.2
145260	50mm Buttweld CS XS TEE	60.3	63.5
145261	65mm Buttweld CS XS TEE	73	76.2
145262	80mm Buttweld CS XS TEE	88.9	85.9
145263	100mm Buttweld CS XS TEE	114.3	104.6
145264	150mm Buttweld CS XS TEE	168.3	142.7
145265	200mm Buttweld CS XS TEE	219.1	304.8

Caps

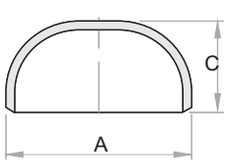

PART NO.	DESCRIPTION	A	C
145266	20mm Buttweld CS XS Cap	26.7	-
145267	25mm Buttweld CS XS Cap	33.4	-
145268	32mm Buttweld CS XS Cap	42.2	-
145269	40mm Buttweld CS XS Cap	48.3	-
145270	50mm Buttweld CS XS Cap	60.3	38.1
145271	65mm Buttweld CS XS Cap	73	38.1
145272	80mm Buttweld CS XS Cap	88.9	50.8
145273	100mm Buttweld CS XS Cap	114.3	63.5
145274	150mm Buttweld CS XS Cap	168.3	88.9
145275	200mm Buttweld CS XS Cap	219.1	101.6

EXTRA STRONG BUTTWELD FITTINGS

Concentric Reducers

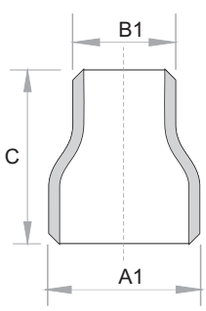

PART No.	DESCRIPTION	"A1"	"B1"	"C"
145276	25mm X 15mm Buttweld CS XS Con Reducer	33.4	21.3	50.8
145277	25mm X 20mm Buttweld CS XS Con Reducer	33.4	26.7	50.8
145278	32mm X 20mm Buttweld CS XS Con Reducer	42.2	26.7	50.8
145279	32mm X 25mm Buttweld CS XS Con Reducer	42.2	33.4	50.8
145280	40mm X 20mm Buttweld CS XS Con Reducer	48.3	26.7	63.5
145281	40mm X 25mm Buttweld CS XS Con Reducer	48.3	33.4	63.5
145282	40mm X 32mm Buttweld CS XS Con Reducer	48.3	42.2	63.5
145283	50mm X 25mm Buttweld CS XS Con Reducer	60.3	33.4	76.2
145284	50mm X 32mm Buttweld CS XS Con Reducer	60.3	42.2	76.2
145285	50mm X 40mm Buttweld CS XS Con Reducer	60.3	48.3	76.2
145286	65mm X 40mm Buttweld CS XS Con Reducer	73	48.3	88.9
145287	65mm X 50mm Buttweld CS XS Con Reducer	73	60.3	88.9
145288	80mm X 40mm Buttweld CS XS Con Reducer	88.9	48.3	88.9
145289	80mm X 50mm Buttweld CS XS Con Reducer	88.9	60.3	88.9
145290	80mm X 65mm Buttweld CS XS Con Reducer	88.9	73	88.9
145291	100mm X 50mm Buttweld CS XS Con Reducer	114.3	60.3	101.6
145292	100mm X 65mm Buttweld CS XS Con Reducer	114.3	73	101.6
145293	100mm X 80mm Buttweld CS XS Con Reducer	114.3	88.9	101.6
145294	125mm X 100mm Buttweld CS XS Con Reducer	141.3	114.3	127
145295	150mm X 80mm Buttweld CS XS Con Reducer	168.3	88.9	139.7
145296	150mm X 100mm Buttweld CS XS Con Reducer	168.3	114.3	139.7
145297	150mm X 125mm Buttweld CS XS Con Reducer	168.3	141.3	139.7
145298	200mm X 150mm Buttweld CS XS Con Reducer	219.1	168.3	
145299	250mm X 150mm Buttweld CS XS Con Reducer	273.1	168.3	
145300	250mm X 200mm Buttweld CS XS Con Reducer	273.1	219.1	
145301	300mm X 200mm Buttweld CS XS Con Reducer	323.9	219.1	
145302	300mm X 250mm Buttweld CS XS Con Reducer	323.9	273.1	

Fire Australia Co Pty Ltd.
ABN No. 13165523713
47 Rushdale St. Knoxfield VIC-3180. Tel:(03) 9764 0020, Fax: (03) 9764 0023.
E-mail : sales@fireausco.com.au www.fireausco.com.au

FIRE AUSTRALIA CO

EXTRA STRONG BUTTWELD FITTINGS

Eccentric Reducers

PART No.	DESCRIPTION
145424	25mm X 15mm Buttweld CS XS Eccentric Reducer
145425	25mm X 20mm Buttweld CS XS Eccentric Reducer
145426	32mm X 25mm Buttweld CS XS Eccentric Reducer
145427	40mm X 25mm Buttweld CS XS Eccentric Reducer
145428	40mm X 32mm Buttweld CS XS Eccentric Reducer
145429	50mm X 25mm Buttweld CS XS Eccentric Reducer
145430	50mm X 40mm Buttweld CS XS Eccentric Reducer
145431	65mm X 40mm Buttweld CS XS Eccentric Reducer
145432	65mm X 50mm Buttweld CS XS Eccentric Reducer
145433	80mm X 40mm Buttweld CS XS Eccentric Reducer
145434	80mm X 50mm Buttweld CS XS Eccentric Reducer
145435	100mm X 80mm Buttweld CS XS Eccentric Reducer
145436	150mm X 80mm Buttweld CS XS Eccentric Reducer
145437	150mm X 100mm Buttweld CS XS Eccentric Reducer
145438	200mm X 100mm Buttweld CS XS Eccentric Reducer
145439	200mm X 150mm Buttweld CS XS Eccentric Reducer
145440	300mm X 250mm Buttweld CS XS Eccentric Reducer

Fire Australia Co Pty Ltd.
ABN No. 13165523713
47 Rushdale St. Knoxfield VIC-3180. Tel:(03) 9764 0020, Fax: (03) 9764 0023.
E-mail : sales@fireausco.com.au www.fireausco.com.au

Sch 10 Concentric Reducer SS 316

PART No.	DESCRIPTION
145303	20mm X 15mm SS 316 Sch.10 Concentric B/W Reducer
145304	25mm X 15mm SS 316 Sch.10 Concentric B/W Reducer
145305	25mm X 20mm SS 316 Sch.10 Concentric B/W Reducer
145306	32mm X 25mm SS 316 Sch.10 Concentric B/W Reducer
145307	40mm X 25mm SS 316 Sch.10 Concentric B/W Reducer
145308	40mm X 32mm SS 316 Sch.10 Concentric B/W Reducer
145309	50mm X 25mm SS 316 Sch.10 Concentric B/W Reducer
145310	50mm X 32mm SS 316 Sch.10 Concentric B/W Reducer
145311	50mm X 40mm SS 316 Sch.10 Concentric B/W Reducer
145312	65mm X 50mm SS 316 Sch.10 Concentric B/W Reducer
145313	80mm X 50mm SS 316 Sch.10 Concentric B/W Reducer
145314	80mm X 65mm SS 316 Sch.10 Concentric B/W Reducer
145315	100mm X 50mm SS 316 Sch.10 Concentric B/W Reducer
145316	100mm X 65mm SS 316 Sch.10 Concentric B/W Reducer
145317	100mm X 80mm SS 316 Sch.10 Concentric B/W Reducer
145318	150mm X 80mm SS 316 Sch.10 Concentric B/W Reducer
145319	150mm X 100mm SS 316 Sch.10 Concentric B/W Reducer

Sch 40 Concentric Reducer SS 316

PART No.	DESCRIPTION
145320	25mm X 15mm SS 316 Sch.40 Concentric B/W Reducer
145321	25mm X 20mm SS 316 Sch.40 Concentric B/W Reducer
145322	32mm X 25mm SS 316 Sch.40 Concentric B/W Reducer
145323	40mm X 25mm SS 316 Sch.40 Concentric B/W Reducer
145324	40mm X 32mm SS 316 Sch.40 Concentric B/W Reducer
145325	50mm X 25mm SS 316 Sch.40 Concentric B/W Reducer
145326	50mm X 32mm SS 316 Sch.40 Concentric B/W Reducer
145327	50mm X 40mm SS 316 Sch.40 Concentric B/W Reducer
145328	65mm X 50mm SS 316 Sch.40 Concentric B/W Reducer
145329	80mm X 50mm SS 316 Sch.40 Concentric B/W Reducer
145330	80mm X 65mm SS 316 Sch.40 Concentric B/W Reducer
145331	100mm X 80mm SS 316 Sch.40 Concentric B/W Reducer
145332	150mm X 80mm SS 316 Sch.40 Concentric B/W Reducer
145333	150mm X 100mm SS 316 Sch.40 Concentric B/W Reducer

Sch 10 Eccentric Reducer SS 316

PART No.	DESCRIPTION
145334	65mm X 50mm SS 316 Sch.10 Eccentric B/W Reducer
145335	80mm X 50mm SS 316 Sch.10 Eccentric B/W Reducer
145336	80mm X 65mm SS 316 Sch.10 Eccentric B/W Reducer
145337	100mm X 50mm SS 316 Sch.10 Eccentric B/W Reducer
145338	100mm X 80mm SS 316 Sch.10 Eccentric B/W Reducer
145339	150mm X 80mm SS 316 Sch.10 Eccentric B/W Reducer
145340	150mm X 100mm SS 316 Sch.10 Eccentric B/W Reducer

Fire Australia Co Pty Ltd.
ABN No. 13165523713
47 Rushdale St. Knoxfield VIC-3180. Tel:(03) 9764 0020, Fax: (03) 9764 0023.
E-mail : sales@fireausco.com.au www.fireausco.com.au

FIRE AUSTRALIA CO

Sch 40 Eccentric Reducer SS 316

PART No.	DESCRIPTION
145341	50mm X 40mm SS 316 Sch.40 Eccentric B/W Reducer
145342	65mm X 50mm SS 316 Sch.40 Eccentric B/W Reducer
145343	80mm X 50mm SS 316 Sch.40 Eccentric B/W Reducer
145344	80mm X 65mm SS 316 Sch.40 Eccentric B/W Reducer
145345	100mm X 50mm SS 316 Sch.40 Eccentric B/W Reducer
145346	100mm X 65mm SS 316 Sch.40 Eccentric B/W Reducer
145347	100mm X 80mm SS 316 Sch.40 Eccentric B/W Reducer
145348	150mm X 80mm SS 316 Sch.40 Eccentric B/W Reducer
145349	150mm X 100mm SS 316 Sch.40 Eccentric B/W Reducer

Sch 10 Pipe End Cap SS 316

PART No.	DESCRIPTION
145350	15mm SS316 Sch.10 Pipe End Cap B/W
145351	20mm SS316 Sch.10 Pipe End Cap B/W
145352	25mm SS316 Sch.10 Pipe End Cap B/W
145353	32mm SS316 Sch.10 Pipe End Cap B/W
145354	40mm SS316 Sch.10 Pipe End Cap B/W
145355	50mm SS316 Sch.10 Pipe End Cap B/W
145356	65mm SS316 Sch.10 Pipe End Cap B/W
145357	80mm SS316 Sch.10 Pipe End Cap B/W
145358	100mm SS316 Sch.10 Pipe End Cap B/W
145359	150mm SS316 Sch.10 Pipe End Cap B/W

Sch 40 Pipe End Cap SS 316

PART No.	DESCRIPTION
145360	25mm SS316 Sch.40 Pipe End Cap B/W
145361	32mm SS316 Sch.40 Pipe End Cap B/W
145362	40mm SS316 Sch.40 Pipe End Cap B/W
145363	50mm SS316 Sch.40 Pipe End Cap B/W
145364	65mm SS316 Sch.40 Pipe End Cap B/W
145365	80mm SS316 Sch.40 Pipe End Cap B/W
145366	100mm SS316 Sch.40 Pipe End Cap B/W
145367	150mm SS316 Sch.40 Pipe End Cap B/W

Sch 10 90 Deg. Elbow SS 316

PART NO.	DESCRIPTION
145368	15mm SS316 Sch.10 Pipe 90° Elbow B/W
145369	20mm SS316 Sch.10 Pipe 90° Elbow B/W
145370	25mm SS316 Sch.10 Pipe 90° Elbow B/W
145371	32mm SS316 Sch.10 Pipe 90° Elbow B/W
145372	40mm SS316 Sch.10 Pipe 90° Elbow B/W
145373	50mm SS316 Sch.10 Pipe 90° Elbow B/W
145374	65mm SS316 Sch.10 Pipe 90° Elbow B/W
145375	80mm SS316 Sch.10 Pipe 90° Elbow B/W
145376	100mm SS316 Sch.10 Pipe 90° Elbow B/W
145377	150mm SS316 Sch.10 Pipe 90° Elbow B/W

Sch 40 90 Deg. Elbow SS 316

PART NO.	DESCRIPTION
145378	15mm SS316 Sch.40 Pipe 90° Elbow B/W
145379	20mm SS316 Sch.40 Pipe 90° Elbow B/W
145380	25mm SS316 Sch.40 Pipe 90° Elbow B/W
145381	32mm SS316 Sch.40 Pipe 90° Elbow B/W
145382	40mm SS316 Sch.40 Pipe 90° Elbow B/W
145383	50mm SS316 Sch.40 Pipe 90° Elbow B/W
145384	65mm SS316 Sch.40 Pipe 90° Elbow B/W
145385	80mm SS316 Sch.40 Pipe 90° Elbow B/W
145386	100mm SS316 Sch.40 Pipe 90° Elbow B/W
145387	150mm SS316 Sch.40 Pipe 90° Elbow B/W

Sch10 45 Deg. Elbow SS 316

PART NO.	DESCRIPTION
145388	15mm SS316 Sch.10 Pipe 45° Elbow B/W
145389	20mm SS316 Sch.10 Pipe 45° Elbow B/W
145390	25mm SS316 Sch.10 Pipe 45° Elbow B/W
145391	32mm SS316 Sch.10 Pipe 45° Elbow B/W
145392	40mm SS316 Sch.10 Pipe 45° Elbow B/W
145393	50mm SS316 Sch.10 Pipe 45° Elbow B/W
145394	65mm SS316 Sch.10 Pipe 45° Elbow B/W
145395	80mm SS316 Sch.10 Pipe 45° Elbow B/W
145396	100mm SS316 Sch.10 Pipe 45° Elbow B/W
145397	150mm SS316 Sch.10 Pipe 45° Elbow B/W

Fire Australia Co Pty Ltd.
ABN No. 13165523713
47 Rushdale St. Knoxfield VIC-3180. Tel:(03) 9764 0020, Fax: (03) 9764 0023.
E-mail : sales@fireausco.com.au www.fireausco.com.au

FIRE AUSTRALIA CO

Sch 40 45 Deg. Elbow SS 316

PART NO.	DESCRIPTION
145398	25mm SS316 Sch.40 Pipe 45° Elbow B/W
145399	32mm SS316 Sch.40 Pipe 45° Elbow B/W
145400	40mm SS316 Sch.40 Pipe 45° Elbow B/W
145401	50mm SS316 Sch.40 Pipe 45° Elbow B/W
145402	65mm SS316 Sch.40 Pipe 45° Elbow B/W
145403	80mm SS316 Sch.40 Pipe 45° Elbow B/W
145404	100mm SS316 Sch.40 Pipe 45° Elbow B/W
145405	150mm SS316 Sch.40 Pipe 45° Elbow B/W

Sch 10 Equal Tee SS 316

PART NO.	DESCRIPTION
145406	15mm SS316 Sch.10 Equal Tee B/W
145407	20mm SS316 Sch.10 Equal Tee B/W
145408	25mm SS316 Sch.10 Equal Tee B/W
145409	32mm SS316 Sch.10 Equal Tee B/W
145410	40mm SS316 Sch.10 Equal Tee B/W
145411	50mm SS316 Sch.10 Equal Tee B/W
145412	65mm SS316 Sch.10 Equal Tee B/W
145413	80mm SS316 Sch.10 Equal Tee B/W
145414	100mm SS316 Sch.10 Equal Tee B/W
145415	150mm SS316 Sch.10 Equal Tee B/W

Sch 40 Equal Tee SS 316

PART NO.	DESCRIPTION
145416	25mm SS316 Sch.40 Equal Tee B/W
145417	32mm SS316 Sch.40 Equal Tee B/W
145418	40mm SS316 Sch.40 Equal Tee B/W
145419	50mm SS316 Sch.40 Equal Tee B/W
145420	65mm SS316 Sch.40 Equal Tee B/W
145421	80mm SS316 Sch.40 Equal Tee B/W
145422	100mm SS316 Sch.40 Equal Tee B/W
145423	150mm SS316 Sch.40 Equal Tee B/W

Forged Carbon Steel 3000lb NPT Bush

PART No.	DESCRIPTION
213001	6mm X 3mm 3000lb High Pressure NPT Bush
213002	10mm X 3mm 3000lb High Pressure NPT Bush
213003	10mm X 6mm 3000lb High Pressure NPT Bush
213004	15mm X 3mm 3000lb High Pressure NPT Bush
213005	15mm X 6mm 3000lb High Pressure NPT Bush
213006	15mm X 10mm 3000lb High Pressure NPT Bush
213007	20mm X 6mm 3000lb High Pressure NPT Bush
213008	20mm X 10mm 3000lb High Pressure NPT Bush
213009	20mm X 15mm 3000lb High Pressure NPT Bush
213010	25mm X 6mm 3000lb High Pressure NPT Bush
213011	25mm X 10mm 3000lb High Pressure NPT Bush
213012	25mm X 15mm 3000lb High Pressure NPT Bush
213013	25mm X 20mm 3000lb High Pressure NPT Bush
213014	32mm X 15mm 3000lb High Pressure NPT Bush
213015	32mm X 20mm 3000lb High Pressure NPT Bush
213016	32mm X 25mm 3000lb High Pressure NPT Bush
213017	40mm X 15mm 3000lb High Pressure NPT Bush
213018	40mm X 20mm 3000lb High Pressure NPT Bush
213019	40mm X 25mm 3000lb High Pressure NPT Bush
213020	40mm X 32mm 3000lb High Pressure NPT Bush
213021	50mm X 15mm 3000lb High Pressure NPT Bush
213022	50mm X 20mm 3000lb High Pressure NPT Bush
213023	50mm X 25mm 3000lb High Pressure NPT Bush
213024	50mm X 32mm 3000lb High Pressure NPT Bush
213025	50mm X 40mm 3000lb High Pressure NPT Bush
213026	65mm X 40mm 3000lb High Pressure NPT Bush
213027	65mm X 50mm 3000lb High Pressure NPT Bush
213028	80mm X 25mm 3000lb High Pressure NPT Bush
213029	80mm X 40mm 3000lb High Pressure NPT Bush
213030	80mm X 50mm 3000lb High Pressure NPT Bush
213031	80mm X 65mm 3000lb High Pressure NPT Bush
213032	100mm X 50mm 3000lb High Pressure NPT Bush
213033	100mm X 65mm 3000lb High Pressure NPT Bush
213034	100mm X 80mm 3000lb High Pressure NPT Bush

Fire Australia Co Pty Ltd.
ABN No. 13165523713
47 Rushdale St. Knoxfield VIC-3180. Tel:(03) 9764 0020, Fax: (03) 9764 0023.
E-mail : sales@fireausco.com.au www.fireausco.com.au

FIRE AUSTRALIA CO

Carbon Steel 3000lb BSPT Bush

PART NO.	DESCRIPTION
213035	15mm X 6mm 3000lb High Pressure BSPT Bush
213036	15mm X 10mm 3000lb High Pressure BSPT Bush
213037	20mm X 15mm 3000lb High Pressure BSPT Bush
213038	25mm X 6mm 3000lb High Pressure BSPT Bush
213039	25mm X 15mm 3000lb High Pressure BSPT Bush
213040	25mm X 20mm 3000lb High Pressure BSPT Bush
213041	32mm X 15mm 3000lb High Pressure BSPT Bush
213042	32mm X 20mm 3000lb High Pressure BSPT Bush
213043	32mm X 25mm 3000lb High Pressure BSPT Bush
213044	40mm X 15mm 3000lb High Pressure BSPT Bush
213045	40mm X 20mm 3000lb High Pressure BSPT Bush
213046	40mm X 25mm 3000lb High Pressure BSPT Bush
213047	40mm X 32mm 3000lb High Pressure BSPT Bush
213048	50mm X 15mm 3000lb High Pressure BSPT Bush
213049	50mm X 25mm 3000lb High Pressure BSPT Bush
213050	50mm X 32mm 3000lb High Pressure BSPT Bush
213051	50mm X 40mm 3000lb High Pressure BSPT Bush

Carbon Steel 3000lb NPT Cap

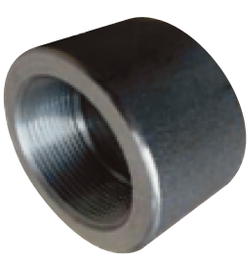

PART NO.	DESCRIPTION
213052	3mm 3000lb High Pressure NPT Cap
213053	6mm 3000lb High Pressure NPT Cap
213054	10mm 3000lb High Pressure NPT Cap
213055	15mm 3000lb High Pressure NPT Cap
213056	20mm 3000lb High Pressure NPT Cap
213057	25mm 3000lb High Pressure NPT Cap
213058	32mm 3000lb High Pressure NPT Cap
213059	40mm 3000lb High Pressure NPT Cap
213060	50mm 3000lb High Pressure NPT Cap
213061	65mm 3000lb High Pressure NPT Cap
213062	80mm 3000lb High Pressure NPT Cap
213063	100mm 3000lb High Pressure NPT Cap

Carbon Steel 3000lb Socket Weld Cap

PART NO.	DESCRIPTION
213064	15mm 3000lb High Pressure S/W Cap
213065	20mm 3000lb High Pressure S/W Cap
213066	25mm 3000lb High Pressure S/W Cap
213067	32mm 3000lb High Pressure S/W Cap
213068	40mm 3000lb High Pressure S/W Cap
213069	50mm 3000lb High Pressure S/W Cap
213070	65mm 3000lb High Pressure S/W Cap
213071	80mm 3000lb High Pressure S/W Cap
213072	100mm 3000lb High Pressure S/W Cap

Carbon Steel 3000lb BSP Cap

PART NO.	DESCRIPTION
213073	15mm 3000lb High Pressure BSP Cap
213074	20mm 3000lb High Pressure BSP Cap
213075	25mm 3000lb High Pressure BSP Cap
213076	32mm 3000lb High Pressure BSP Cap
213077	40mm 3000lb High Pressure BSP Cap
213078	50mm 3000lb High Pressure BSP Cap
213079	65mm 3000lb High Pressure BSP Cap
213080	80mm 3000lb High Pressure BSP Cap
213081	100mm 3000lb High Pressure BSP Cap

Carbon Steel 3000lb NPT Half Coupling

PART NO.	DESCRIPTION
213082	6mm 3000lb High Pressure NPT Half Coupling
213083	10mm 3000lb High Pressure NPT Half Coupling
213084	15mm 3000lb High Pressure NPT Half Coupling
213085	20mm 3000lb High Pressure NPT Half Coupling
213086	25mm 3000lb High Pressure NPT Half Coupling
213087	32mm 3000lb High Pressure NPT Half Coupling
213088	40mm 3000lb High Pressure NPT Half Coupling
213089	50mm 3000lb High Pressure NPT Half Coupling
213090	65mm 3000lb High Pressure NPT Half Coupling
213091	80mm 3000lb High Pressure NPT Half Coupling
213092	100mm 3000lb High Pressure NPT Half Coupling

Carbon Steel 3000lb Socket Weld Half Coupling

PART NO.	DESCRIPTION
213093	6mm 3000lb High Pressure Socket S/W Half Coupling
213094	10mm 3000lb High Pressure Socket S/W Half Coupling
213095	15mm 3000lb High Pressure Socket S/W Half Coupling
213096	20mm 3000lb High Pressure Socket S/W Half Coupling
213097	25mm 3000lb High Pressure Socket S/W Half Coupling
213098	32mm 3000lb High Pressure Socket S/W Half Coupling
213099	40mm 3000lb High Pressure Socket S/W Half Coupling
213100	50mm 3000lb High Pressure Socket S/W Half Coupling
213101	65mm 3000lb High Pressure Socket S/W Half Coupling
213102	80mm 3000lb High Pressure Socket S/W Half Coupling

Fire Australia Co Pty Ltd.
ABN No. 13165523713
47 Rushdale St. Knoxfield VIC-3180. Tel:(03) 9764 0020, Fax: (03) 9764 0023.
E-mail : sales@fireausco.com.au www.fireausco.com.au

FIRE AUSTRALIA CO

Carbon Steel 3000lb BSP Half Coupling

PART NO.	DESCRIPTION
213103	6mm 3000lb High Pressure BSP Half Coupling
213104	100mm 3000lb High Pressure BSP Half Coupling
213105	15mm 3000lb High Pressure BSP Half Coupling
213106	20mm 3000lb High Pressure BSP Half Coupling
213107	25mm 3000lb High Pressure BSP Half Coupling
213108	32mm 3000lb High Pressure BSP Half Coupling
213109	40mm 3000lb High Pressure BSP Half Coupling
213110	50mm 3000lb High Pressure BSP Half Coupling
213111	65mm 3000lb High Pressure BSP Half Coupling
213112	80mm 3000lb High Pressure BSP Half Coupling
213113	100mm 3000lb High Pressure BSP Half Coupling

Carbon Steel 3000lb NPT Full Coupling

PART NO.	DESCRIPTION
213114	3mm 3000lb High Pressure NPT Full Coupling
213115	6mm 3000lb High Pressure NPT Full Coupling
213116	10mm 3000lb High Pressure NPT Full Coupling
213117	15mm 3000lb High Pressure NPT Full Coupling
213118	20mm 3000lb High Pressure NPT Full Coupling
213119	25mm 3000lb High Pressure NPT Full Coupling
213120	32mm 3000lb High Pressure NPT Full Coupling
213121	40mm 3000lb High Pressure NPT Full Coupling
213122	50mm 3000lb High Pressure NPT Full Coupling
213123	65mm 3000lb High Pressure NPT Full Coupling
213124	80mm 3000lb High Pressure NPT Full Coupling
213125	100mm 3000lb High Pressure NPT Full Coupling

Carbon Steel 3000lb Socket Weld Full Coupling

PART NO.	DESCRIPTION
213126	6mm 3000lb High Pressure S/W Full Coupling
213127	10mm 3000lb High Pressure S/W Full Coupling
213128	15mm 3000lb High Pressure S/W Full Coupling
213129	20mm 3000lb High Pressure S/W Full Coupling
213130	25mm 3000lb High Pressure S/W Full Coupling
213131	32mm 3000lb High Pressure S/W Full Coupling
213132	40mm 3000lb High Pressure S/W Full Coupling
213133	50mm 3000lb High Pressure S/W Full Coupling
213134	65mm 3000lb High Pressure S/W Full Coupling
213135	80mm 3000lb High Pressure S/W Full Coupling
213136	100mm 3000lb High Pressure S/W Full Coupling

Carbon Steel 3000lb BSP Full Coupling

PART NO.	DESCRIPTION
213137	3mm 3000lb High Pressure BSP Full Coupling
213138	6mm 3000lb High Pressure BSP Full Coupling
213139	10mm 3000lb High Pressure BSP Full Coupling
213140	15mm 3000lb High Pressure BSP Full Coupling
213141	20mm 3000lb High Pressure BSP Full Coupling
213142	25mm 3000lb High Pressure BSP Full Coupling
213143	32mm 3000lb High Pressure BSP Full Coupling
213144	40mm 3000lb High Pressure BSP Full Coupling
213145	50mm 3000lb High Pressure BSP Full Coupling
213146	65mm 3000lb High Pressure BSP Full Coupling
213147	80mm 3000lb High Pressure BSP Full Coupling
213148	100mm 3000lb High Pressure BSP Full Coupling

Carbon Steel 3000lb NPT Reducing Coupling

PART NO.	DESCRIPTION
213149	6mm X 3mm 3000lb High Pressure NPT Reducing Coupling
213150	10mm X 3mm 3000lb High Pressure NPT Reducing Coupling
213151	10mm X 6mm 3000lb High Pressure NPT Reducing Coupling
213152	15mm X 6mm 3000lb High Pressure NPT Reducing Coupling
213153	15mm X 10mm 3000lb High Pressure NPT Reducing Coupling
213154	20mm X 6mm 3000lb High Pressure NPT Reducing Coupling
213155	20mm X 10mm 3000lb High Pressure NPT Reducing Coupling
213156	20mm X 15mm 3000lb High Pressure NPT Reducing Coupling
213157	25mm X 6mm 3000lb High Pressure NPT Reducing Coupling
213158	25mm X 15mm 3000lb High Pressure NPT Reducing Coupling
213159	25mm X 20mm 3000lb High Pressure NPT Reducing Coupling
213160	32mm X 20mm 3000lb High Pressure NPT Reducing Coupling
213161	32mm X 25mm 3000lb High Pressure NPT Reducing Coupling
213162	40mm X 25mm 3000lb High Pressure NPT Reducing Coupling
213163	40mm X 32mm 3000lb High Pressure NPT Reducing Coupling
213164	50mm X 15mm 3000lb High Pressure NPT Reducing Coupling
213165	50mm X 20mm 3000lb High Pressure NPT Reducing Coupling
213166	50mm X 25mm 3000lb High Pressure NPT Reducing Coupling
213167	50mm X 32mm 3000lb High Pressure NPT Reducing Coupling
213168	50mm X 40mm 3000lb High Pressure NPT Reducing Coupling
213169	80mm X 50mm 3000lb High Pressure NPT Reducing Coupling

Carbon Steel 3000lb BSP Reducing Coupling

PART NO.	DESCRIPTION
213170	15mm X 10mm 3000lb High Pressure BSP Reducing Coupling
213171	20mm X 15mm 3000lb High Pressure BSP Reducing Coupling
213172	25mm X 15mm 3000lb High Pressure BSP Reducing Coupling

Fire Australia Co Pty Ltd.
ABN No. 13165523713
47 Rushdale St. Knoxfield VIC-3180. Tel:(03) 9764 0020, Fax: (03) 9764 0023.
E-mail : sales@fireausco.com.au www.fireausco.com.au

FIRE AUSTRALIA CO

Carbon Steel 3000lb Socket Weld Reducing Coupling

PART NO.	DESCRIPTION
213173	15mm X 6mm 3000lb High Pressure S/W Reducing Coupling
213174	20mm X 6mm 3000lb High Pressure S/W Reducing Coupling
213175	20mm X 15mm 3000lb High Pressure S/W Reducing Coupling
213176	25mm X 15mm 3000lb High Pressure S/W Reducing Coupling
213177	25mm X 20mm 3000lb High Pressure S/W Reducing Coupling
213178	32mm X 25mm 3000lb High Pressure S/W Reducing Coupling
213179	40mm X 20mm 3000lb High Pressure S/W Reducing Coupling
213180	40mm X 25mm 3000lb High Pressure S/W Reducing Coupling
213181	40mm X 32mm 3000lb High Pressure S/W Reducing Coupling
213182	50mm X 25mm 3000lb High Pressure S/W Reducing Coupling
213183	50mm X 32mm 3000lb High Pressure S/W Reducing Coupling
213184	50mm X 40mm 3000lb High Pressure S/W Reducing Coupling

Carbon Steel 3000lb NPT Cross

PART NO.	DESCRIPTION
213185	6mm 3000lb High Pressure NPT Cross
213186	10mm 3000lb High Pressure NPT Cross
213187	15mm 3000lb High Pressure NPT Cross
213188	20mm 3000lb High Pressure NPT Cross
213189	25mm 3000lb High Pressure NPT Cross
213190	32mm 3000lb High Pressure NPT Cross
213191	40mm 3000lb High Pressure NPT Cross
213192	50mm 3000lb High Pressure NPT Cross

Carbon Steel 3000lb Socket Weld Cross

PART NO.	DESCRIPTION
213193	10mm 3000lb High Pressure S/W Cross
213194	15mm 3000lb High Pressure S/W Cross
213195	20mm 3000lb High Pressure S/W Cross
213196	25mm 3000lb High Pressure S/W Cross
213197	32mm 3000lb High Pressure S/W Cross
213198	40mm 3000lb High Pressure S/W Cross
213199	50mm 3000lb High Pressure S/W Cross

Carbon Steel 3000lb NPT Female X Female 90° Elbow

PART NO.	DESCRIPTION
213200	3mm 3000lb High Pressure NPT F/F 90° Elbow
213201	6mm 3000lb High Pressure NPT F/F 90° Elbow
213202	10mm 3000lb High Pressure NPT F/F 90° Elbow
213203	15mm 3000lb High Pressure NPT F/F 90° Elbow
213204	20mm 3000lb High Pressure NPT F/F 90° Elbow
213205	25mm 3000lb High Pressure NPT F/F 90° Elbow
213206	32mm 3000lb High Pressure NPT F/F 90° Elbow
213207	40mm 3000lb High Pressure NPT F/F 90° Elbow
213208	50mm 3000lb High Pressure NPT F/F 90° Elbow
213209	65mm 3000lb High Pressure NPT F/F 90° Elbow
213210	80mm 3000lb High Pressure NPT F/F 90° Elbow
213211	100mm 3000lb High Pressure NPT F/F 90° Elbow

Carbon Steel 3000lb Socket Weld Female X Female 90° Elbow

PART NO.	DESCRIPTION
213212	6mm 3000lb High Pressure S/W F/F 90° Elbow
213213	10mm 3000lb High Pressure S/W F/F 90° Elbow
213214	15mm 3000lb High Pressure S/W F/F 90° Elbow
213215	20mm 3000lb High Pressure S/W F/F 90° Elbow
213216	25mm 3000lb High Pressure S/W F/F 90° Elbow
213217	32mm 3000lb High Pressure S/W F/F 90° Elbow
213218	40mm 3000lb High Pressure S/W F/F 90° Elbow
213219	50mm 3000lb High Pressure S/W F/F 90° Elbow
213220	65mm 3000lb High Pressure S/W F/F 90° Elbow
213221	80mm 3000lb High Pressure S/W F/F 90° Elbow
213222	100mm 3000lb High Pressure S/W F/F 90° Elbow

Carbon Steel 3000lb BSP Female X Female 90° Elbow

PART NO.	DESCRIPTION
213223	6mm 3000lb High Pressure BSP F/F 90° Elbow
213224	10mm 3000lb High Pressure BSP F/F 90° Elbow
213225	15mm 3000lb High Pressure BSP F/F 90° Elbow
213226	20mm 3000lb High Pressure BSP F/F 90° Elbow
213227	25mm 3000lb High Pressure BSP F/F 90° Elbow
213228	32mm 3000lb High Pressure BSP F/F 90° Elbow
213229	40mm 3000lb High Pressure BSP F/F 90° Elbow
213230	50mm 3000lb High Pressure BSP F/F 90° Elbow

Carbon Steel 3000lb NPT Female X Female 45° Elbow

PART NO.	DESCRIPTION
213231	15mm 3000lb High Pressure NPT F/F 45° Elbow
213232	20mm 3000lb High Pressure NPT F/F 45° Elbow
213233	25mm 3000lb High Pressure NPT F/F 45° Elbow
213234	32mm 3000lb High Pressure NPT F/F 45° Elbow
213235	40mm 3000lb High Pressure NPT F/F 45° Elbow
213236	50mm 3000lb High Pressure NPT F/F 45° Elbow
213237	65mm 3000lb High Pressure NPT F/F 45° Elbow
213238	80mm 3000lb High Pressure NPT F/F 45° Elbow
213239	100mm 3000lb High Pressure NPT F/F 45° Elbow

Fire Australia Co Pty Ltd.
ABN No. 13165523713
47 Rushdale St. Knoxfield VIC-3180. Tel:(03) 9764 0020, Fax: (03) 9764 0023.
E-mail : sales@fireausco.com.au www.fireausco.com.au

FIRE AUSTRALIA CO

Carbon Steel 3000lb Socket Weld Female X Female 45° Elbow

PART NO.	DESCRIPTION
213240	15mm 3000lb High Pressure S/W F/F 45° Elbow
213241	20mm 3000lb High Pressure S/W F/F 45° Elbow
213242	25mm 3000lb High Pressure S/W F/F 45° Elbow
213243	32mm 3000lb High Pressure S/W F/F 45° Elbow
213244	40mm 3000lb High Pressure S/W F/F 45° Elbow
213245	50mm 3000lb High Pressure S/W F/F 45° Elbow
213246	65mm 3000lb High Pressure S/W F/F 45° Elbow
213247	80mm 3000lb High Pressure S/W F/F 45° Elbow
213248	100mm 3000lb High Pressure S/W F/F 45° Elbow

Carbon Steel 3000lb BSP Female X Female 45° Elbow

PART NO.	DESCRIPTION
213249	15mm 3000lb High Pressure BSP F/F 45° Elbow
213250	20mm 3000lb High Pressure BSP F/F 45° Elbow
213251	25mm 3000lb High Pressure BSP F/F 45° Elbow
213252	32mm 3000lb High Pressure BSP F/F 45° Elbow
213253	40mm 3000lb High Pressure BSP F/F 45° Elbow
213254	50mm 3000lb High Pressure BSP F/F 45° Elbow

Carbon Steel 3000lb NPT Male X Female 90° Elbow

PART NO.	DESCRIPTION
213255	6mm 3000lb High Pressure NPT M/F 90° Elbow
213256	10mm 3000lb High Pressure NPT M/F 90° Elbow
213257	15mm 3000lb High Pressure NPT M/F 90° Elbow
213258	20mm 3000lb High Pressure NPT M/F 90° Elbow
213259	25mm 3000lb High Pressure NPT M/F 90° Elbow
213260	32mm 3000lb High Pressure NPT M/F 90° Elbow
213261	40mm 3000lb High Pressure NPT M/F 90° Elbow
213262	50mm 3000lb High Pressure NPT M/F 90° Elbow

Carbon Steel 3000lb NPT Hex Nipple

PART NO.	DESCRIPTION
213263	3mm 3000lb High Pressure NPT Hex Nipple
213264	6mm 3000lb High Pressure NPT Hex Nipple
213265	10mm 3000lb High Pressure NPT Hex Nipple
213266	15mm 3000lb High Pressure NPT Hex Nipple
213267	20mm 3000lb High Pressure NPT Hex Nipple
213268	25mm 3000lb High Pressure NPT Hex Nipple
213269	32mm 3000lb High Pressure NPT Hex Nipple
213270	40mm 3000lb High Pressure NPT Hex Nipple
213271	50mm 3000lb High Pressure NPT Hex Nipple
213272	65mm 3000lb High Pressure NPT Hex Nipple
213273	80mm 3000lb High Pressure NPT Hex Nipple
213274	100mm 3000lb High Pressure NPT Hex Nipple

Fire Australia Co Pty Ltd.
ABN No. 13165523713
47 Rushdale St. Knoxfield VIC-3180. Tel:(03) 9764 0020, Fax: (03) 9764 0023.
E-mail : sales@fireausco.com.au www.fireausco.com.au

Carbon Steel 3000lb BSPT Hex Nipple

PART NO.	DESCRIPTION
213275	3mm 3000lb High Pressure BSPT Hex Nipple
213276	6mm 3000lb High Pressure BSPT Hex Nipple
213277	10mm 3000lb High Pressure BSPT Hex Nipple
213278	15mm 3000lb High Pressure BSPT Hex Nipple
213279	20mm 3000lb High Pressure BSPT Hex Nipple
213280	25mm 3000lb High Pressure BSPT Hex Nipple
213281	32mm 3000lb High Pressure BSPT Hex Nipple
213282	40mm 3000lb High Pressure BSPT Hex Nipple
213283	50mm 3000lb High Pressure BSPT Hex Nipple
213284	65mm 3000lb High Pressure BSPT Hex Nipple
213285	80mm 3000lb High Pressure BSPT Hex Nipple
213286	100mm 3000lb High Pressure BSPT Hex Nipple

Carbon Steel 3000lb NPT Reducing Nipple

PART NO.	DESCRIPTION
213287	6mm X 3mm 3000lb High Pressure NPT Reducing Nipple
213288	10mm X 3mm 3000lb High Pressure NPT Reducing Nipple
213289	10mm X 6mm 3000lb High Pressure NPT Reducing Nipple
213290	15mm X 6mm 3000lb High Pressure NPT Reducing Nipple
213291	15mm X 10mm 3000lb High Pressure NPT Reducing Nipple
213292	20mm X 6mm 3000lb High Pressure NPT Reducing Nipple
213293	20mm X 10mm 3000lb High Pressure NPT Reducing Nipple
213294	20mm X 15mm 3000lb High Pressure NPT Reducing Nipple
213295	25mm X 6mm 3000lb High Pressure NPT Reducing Nipple
213296	25mm X 10mm 3000lb High Pressure NPT Reducing Nipple
213297	25mm X 15mm 3000lb High Pressure NPT Reducing Nipple
213298	25mm X 20mm 3000lb High Pressure NPT Reducing Nipple
213299	32mm X 20mm 3000lb High Pressure NPT Reducing Nipple
213300	32mm X 25mm 3000lb High Pressure NPT Reducing Nipple
213301	40mm X 15mm 3000lb High Pressure NPT Reducing Nipple
213302	40mm X 20mm 3000lb High Pressure NPT Reducing Nipple
213303	40mm X 25mm 3000lb High Pressure NPT Reducing Nipple
213304	40mm X 32mm 3000lb High Pressure NPT Reducing Nipple
213305	50mm X 15mm 3000lb High Pressure NPT Reducing Nipple
213306	50mm X 20mm 3000lb High Pressure NPT Reducing Nipple
213307	50mm X 25mm 3000lb High Pressure NPT Reducing Nipple
213308	50mm X 32mm 3000lb High Pressure NPT Reducing Nipple
213309	50mm X 40mm 3000lb High Pressure NPT Reducing Nipple
213310	65mm X 50mm 3000lb High Pressure NPT Reducing Nipple
213311	80mm X 50mm 3000lb High Pressure NPT Reducing Nipple

Fire Australia Co Pty Ltd.
ABN No. 13165523713
47 Rushdale St. Knoxfield VIC-3180. Tel:(03) 9764 0020, Fax: (03) 9764 0023.
E-mail : sales@fireausco.com.au www.fireausco.com.au

FIRE AUSTRALIA CO

Carbon Steel 3000lb BSPT Hex Reducing Nipple

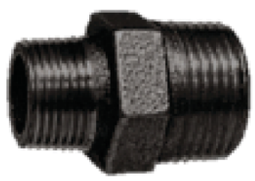

PART NO.	DESCRIPTION
213312	10mm X 6mm 3000lb High Pressure BSPT Reducing Nipple
213313	15mm X 6mm 3000lb High Pressure BSPT Reducing Nipple
213314	15mm X 10mm 3000lb High Pressure BSPT Reducing Nipple
213315	20mm X 10mm 3000lb High Pressure BSPT Reducing Nipple
213316	20mm X 15mm 3000lb High Pressure BSPT Reducing Nipple
213317	25mm X 15mm 3000lb High Pressure BSPT Reducing Nipple
213318	25mm X 20mm 3000lb High Pressure BSPT Reducing Nipple
213319	32mm X 20mm 3000lb High Pressure BSPT Reducing Nipple
213320	32mm X 25mm 3000lb High Pressure BSPT Reducing Nipple
213321	40mm X 25mm 3000lb High Pressure BSPT Reducing Nipple
213322	40mm X 32mm 3000lb High Pressure BSPT Reducing Nipple
213323	50mm X 25mm 3000lb High Pressure BSPT Reducing Nipple
213324	50mm X 32mm 3000lb High Pressure BSPT Reducing Nipple
213325	50mm X 40mm 3000lb High Pressure BSPT Reducing Nipple

Carbon Steel 3000lb NPT/BSPT Cross Over Nipple

PART NO.	DESCRIPTION
213326	6mm 3000lb High Pressure NPT/BSPT Cross Over Nipple
213327	15mm 3000lb High Pressure NPT/BSPT Cross Over Nipple
213328	20mm 3000lb High Pressure NPT/BSPT Cross Over Nipple
213329	25mm 3000lb High Pressure NPT/BSPT Cross Over Nipple
213330	40mm 3000lb High Pressure NPT/BSPT Cross Over Nipple
213331	50mm 3000lb High Pressure NPT/BSPT Cross Over Nipple
213332	80mm 3000lb High Pressure NPT/BSPT Cross Over Nipple

Carbon Steel 3000lb NPT Plug

PART NO.	DESCRIPTION
213333	3mm 3000lb` High Pressure NPT Plug
213334	6mm 3000lb High Pressure NPT Plug
213335	10mm 3000lb High Pressure NPT Plug
213336	15mm 3000lb High Pressure NPT Plug
213337	20mm 3000lb High Pressure NPT Plug
213338	25mm 3000lb High Pressure NPT Plug
213339	32mm 3000lb High Pressure NPT Plug
213340	40mm 3000lb High Pressure NPT Plug
213341	50mm 3000lb High Pressure NPT Plug
213342	65mm 3000lb High Pressure NPT Plug
213343	80mm 3000lb High Pressure NPT Plug
213344	100mm 3000lb High Pressure NPT Plug

Carbon Steel 3000lb BSPT Plug

PART NO.	DESCRIPTION
213345	3mm 3000lb High Pressure BSPT Plug
213346	6mm 3000lb High Pressure BSPT Plug
213347	10mm 3000lb High Pressure BSPT Plug
213348	15mm 3000lb High Pressure BSPT Plug
213349	20mm 3000lb High Pressure BSPT Plug
213350	25mm 3000lb High Pressure BSPT Plug
213351	32mm 3000lb High Pressure BSPT Plug
213352	40mm 3000lb High Pressure BSPT Plug
213353	50mm 3000lb High Pressure BSPT Plug
213354	65mm 3000lb High Pressure BSPT Plug
213355	80mm 3000lb High Pressure BSPT Plug

Carbon Steel 3000lb NPT Tee

PART NO.	DESCRIPTION
213356	3mm 3000lb High Pressure NPT Tee
213357	6mm 3000lb High Pressure NPT Tee
213358	10mm 3000lb High Pressure NPT Tee
213359	15mm 3000lb High Pressure NPT Tee
213360	20mm 3000lb High Pressure NPT Tee
213361	25mm 3000lb High Pressure NPT Tee
213362	32mm 3000lb High Pressure NPT Tee
213363	40mm 3000lb High Pressure NPT Tee
213364	50mm 3000lb High Pressure NPT Tee
213365	65mm 3000lb High Pressure NPT Tee
213366	80mm 3000lb High Pressure NPT Tee
213367	100mm 3000lb High Pressure NPT Tee

Carbon Steel 3000lb Socket Weld Tee

PART NO.	DESCRIPTION
213368	6mm 3000lb High Pressure S/W Tee
213369	10mm 3000lb High Pressure S/W Tee
213370	15mm 3000lb High Pressure S/W Tee
213371	20mm 3000lb High Pressure S/W Tee
213372	25mm 3000lb High Pressure S/W Tee
213373	32mm 3000lb High Pressure S/W Tee
213374	40mm 3000lb High Pressure S/W Tee
213375	50mm 3000lb High Pressure S/W Tee

Fire Australia Co Pty Ltd.
ABN No. 13165523713
47 Rushdale St. Knoxfield VIC-3180. Tel:(03) 9764 0020, Fax: (03) 9764 0023.
E-mail : sales@fireausco.com.au www.fireausco.com.au

FIRE AUSTRALIA CO

Carbon Steel 3000lb BSP Tee

PART NO.	DESCRIPTION
213376	6mm 3000lb High Pressure BSP Tee
213377	10mm 3000lb High Pressure BSP Tee
213378	15mm 3000lb High Pressure BSP Tee
213379	20mm 3000lb High Pressure BSP Tee
213380	25mm 3000lb High Pressure BSP Tee
213381	32mm 3000lb High Pressure BSP Tee
213382	40mm 3000lb High Pressure BSP Tee
213383	50mm 3000lb High Pressure BSP Tee
213384	65mm 3000lb High Pressure BSP Tee
213385	80mm 3000lb High Pressure BSP Tee
213386	100mm 3000lb High Pressure BSP Tee

Carbon Steel 3000lb NPT Female X Female Union

PART NO.	DESCRIPTION
213387	3mm 3000lb High Pressure NPT F/F Union
213388	6mm 3000lb High Pressure NPT F/F Union
213389	10mm 3000lb High Pressure NPT F/F Union
213390	15mm 3000lb High Pressure NPT F/F Union
213391	20mm 3000lb High Pressure NPT F/F Union
213392	25mm 3000lb High Pressure NPT F/F Union
213393	32mm 3000lb High Pressure NPT F/F Union
213394	40mm 3000lb High Pressure NPT F/F Union
213395	50mm 3000lb High Pressure NPT F/F Union
213396	80mm 3000lb High Pressure NPT F/F Union
213397	100mm 3000lb High Pressure NPT F/F Union

Carbon Steel 3000lb Socket Weld Female X Female Union

PART NO.	DESCRIPTION
213398	10mm 3000lb High Pressure S/W F/F Union
213399	15mm 3000lb High Pressure S/W F/F Union
213400	20mm 3000lb High Pressure S/W F/F Union
213401	25mm 3000lb High Pressure S/W F/F Union
213402	32mm 3000lb High Pressure S/W F/F Union
213403	40mm 3000lb High Pressure S/W F/F Union
213404	50mm 3000lb High Pressure S/W F/F Union
213405	65mm 3000lb High Pressure S/W F/F Union
213406	80mm 3000lb High Pressure S/W F/F Union

Fire Australia Co Pty Ltd.
ABN No. 13165523713
47 Rushdale St. Knoxfield VIC-3180. Tel:(03) 9764 0020, Fax: (03) 9764 0023.
E-mail : sales@fireausco.com.au www.fireausco.com.au

Carbon Steel 3000lb BSP Female X Female Union

PART NO.	DESCRIPTION
213407	15mm 3000lb High Pressure BSP F/F Union
213408	20mm 3000lb High Pressure BSP F/F Union
213409	25mm 3000lb High Pressure BSP F/F Union
213410	32mm 3000lb High Pressure BSP F/F Union
213411	40mm 3000lb High Pressure BSP F/F Union
213412	50mm 3000lb High Pressure BSP F/F Union

Carbon Steel 3000lb Socket Weld Outlet

PART NO.	DESCRIPTION
213413	15mm 3000lb High Pressure S/W Outlet
213414	20mm 3000lb High Pressure S/W Outlet
213415	25mm 3000lb High Pressure S/W Outlet
213416	40mm 3000lb High Pressure S/W Outlet
213417	50mm 3000lb High Pressure S/W Outlet

Carbon Steel 3000lb BSP Threaded Outlet

PART NO.	DESCRIPTION
213418	15mm 3000lb High Pressure BSP Threaded Outlet
213419	20mm 3000lb High Pressure BSP Threaded Outlet
213420	25mm 3000lb High Pressure BSP Threaded Outlet
213421	32mm 3000lb High Pressure BSP Threaded Outlet
213422	40mm 3000lb High Pressure BSP Threaded Outlet
213423	50mm 3000lb High Pressure BSP Threaded Outlet

Carbon Steel 3000lb NPT Threaded Outlet

PART NO.	DESCRIPTION
213424	15mm 3000lb High Pressure NPT Threaded Outlet
213425	20mm 3000lb High Pressure NPT Threaded Outlet
213426	25mm 3000lb High Pressure NPT Threaded Outlet
213427	32mm 3000lb High Pressure NPT Threaded Outlet
213428	40mm 3000lb High Pressure NPT Threaded Outlet
213429	50mm 3000lb High Pressure NPT Threaded Outlet

Fire Australia Co Pty Ltd.
ABN No. 13165523713
47 Rushdale St. Knoxfield VIC-3180. Tel:(03) 9764 0020, Fax: (03) 9764 0023.
E-mail : sales@fireausco.com.au www.fireausco.com.au

Table D Slip-On Weld Flanges

PART No.	DESCRIPTION
146001	100mm Steel Table D Slip-On Weld Flange
146002	125mm Steel Table D Slip-On Weld Flange
146003	150mm Steel Table D Slip-On Weld Flange Suit 165mm
146004	150mm Steel Table D Slip-On Weld Flange Suit 168mm
146005	200mm Steel Table D Slip-On Weld Flange
146006	250mm Steel Table D Slip-On Weld Flange
146007	300mm Steel Table D Slip-On Weld Flange
146008	350mm Steel Table D Slip-On Weld Flange
146009	400mm Steel Table D Slip-On Weld Flange
146010	450mm Steel Table D Slip-On Weld Flange
146011	500mm Steel Table D Slip-On Weld Flange
146012	550mm Steel Table D Slip-On Weld Flange
146013	600mm Steel Table D Slip-On Weld Flange

Table D Blind Flanges

PART No.	DESCRIPTION
146014	100mm Steel Table D Blind Flange
146015	125mm Steel Table D Blind Flange
146016	150mm Steel Table D Blind Flange
146017	200mm Steel Table D Blind Flange
146018	250mm Steel Table D Blind Flange
146019	300mm Steel Table D Blind Flange
146020	350mm Steel Table D Blind Flange
146021	400mm Steel Table D Blind Flange
146022	450mm Steel Table D Blind Flange
146023	500mm Steel Table D Blind Flange
146024	550mm Steel Table D Blind Flange
146025	600mm Steel Table D Blind Flange

Table E Slip-On Weld Flange

PART No.	DESCRIPTION
146026	15mm Steel Table E Slip-On Weld Flange
146027	20mm Steel Table E Slip-On Weld Flange
146028	25mm Steel Table E Slip-On Weld Flange
146029	32mm Steel Table E Slip-On Weld Flange
146030	40mm Steel Table E Slip-On Weld Flange
146031	50mm Steel Table E Slip-On Weld Flange
146032	65mm Steel Table E Slip-On Weld Flange
146033	80mm Steel Table E Slip-On Weld Flange
146034	100mm Steel Table E Slip-On Weld Flange
146035	125mm Steel Table E Slip-On Weld Flange
146036	150mm Steel Table E Slip-On Weld Flange Suit 165mm
146037	150mm Steel Table E Slip-On Weld Flange Suit 168mm
146038	200mm Steel Table E Slip-On Weld Flange
146039	250mm Steel Table E Slip-On Weld Flange
146040	300mm Steel Table E Slip-On Weld Flange
146041	350mm Steel Table E Slip-On Weld Flange
146042	400mm Steel Table E Slip-On Weld Flange
146043	450mm Steel Table E Slip-On Weld Flange
146044	500mm Steel Table E Slip-On Weld Flange
146045	550mm Steel Table E Slip-On Weld Flange
146046	600mm Steel Table E Slip-On Weld Flange

Table E Blind Flanges

PART NO.	DESCRIPTION
146047	15mm Steel Table E Blind Flange
146048	20mm Steel Table E Blind Flange
146049	25mm Steel Table E Blind Flange
146050	32mm Steel Table E Blind Flange
146051	40mm Steel Table E Blind Flange
146052	50mm Steel Table E Blind Flange
146053	65mm Steel Table E Blind Flange
146054	80mm Steel Table E Blind Flange
146055	100mm Steel Table E Blind Flange
146056	125mm Steel Table E Blind Flange
146057	150mm Steel Table E Blind Flange
146058	200mm Steel Table E Blind Flange
146059	250mm Steel Table E Blind Flange
146060	300mm Steel Table E Blind Flange
146061	350mm Steel Table E Blind Flange
146062	400mm Steel Table E Blind Flange
146063	450mm Steel Table E Blind Flange
146064	500mm Steel Table E Blind Flange
146065	550mm Steel Table E Blind Flange
146066	600mm Steel Table E Blind Flange

Table H Slip-On Weld Flanges

PART NO.	DESCRIPTION
146067	15mm Steel Table H Slip-On Weld Flange
146068	20mm Steel Table H Slip-On Weld Flange
146069	25mm Steel Table H Slip-On Weld Flange
146070	32mm Steel Table H Slip-On Weld Flange
146071	40mm Steel Table H Slip-On Weld Flange
146072	50mm Steel Table H Slip-On Weld Flange
146073	65mm Steel Table H Slip-On Weld Flange
146074	80mm Steel Table H Slip-On Weld Flange
146075	100mm Steel Table H Slip-On Weld Flange
146076	125mm Steel Table H Slip-On Weld Flange
146077	150mm Steel Table H Slip-On Weld Flange
146078	200mm Steel Table H Slip-On Weld Flange
146079	250mm Steel Table H Slip-On Weld Flange
146080	300mm Steel Table H Slip-On Weld Flange
146081	350mm Steel Table H Slip-On Weld Flange

Fire Australia Co Pty Ltd.
ABN No. 13165523713
47 Rushdale St. Knoxfield VIC-3180. Tel:(03) 9764 0020, Fax: (03) 9764 0023.
E-mail : sales@fireausco.com.au www.fireausco.com.au

Table H Blind Flanges

PART NO.	DESCRIPTION
146082	50mm Steel Table H Blind Flange
146083	65mm Steel Table H Blind Flange
146084	80mm Steel Table H Blind Flange
146085	100mm Steel Table H Blind Flange
146086	125mm Steel Table H Blind Flange
146087	150mm Steel Table H Blind Flange
146088	200mm Steel Table H Blind Flange
146089	250mm Steel Table H Blind Flange
146090	300mm Steel Table H Blind Flange

BS 10 Forged Steel Boss Flange Table E Screwed BSP

PART NO.	DESCRIPTION
146091	15mm Forged Steel Table E Boss Flange Screwed BSP
146092	20mm Forged Steel Table E Boss Flange Screwed BSP
146093	25mm Forged Steel Table E Boss Flange Screwed BSP
146094	32mm Forged Steel Table E Boss Flange Screwed BSP
146095	40mm Forged Steel Table E Boss Flange Screwed BSP
146096	50mm Forged Steel Table E Boss Flange Screwed BSP
146097	65mm Forged Steel Table E Boss Flange Screwed BSP
146098	80mm Forged Steel Table E Boss Flange Screwed BSP
146099	100mm Forged Steel Table E Boss Flange Screwed BSP

EN 1092-1 PN16 Slip-On Weld Flanges

PART NO.	DESCRIPTION
146100	15mm Steel DIN 16 Slip-On Flange
146101	20mm Steel DIN 16 Slip-On Flange
146102	25mm Steel DIN 16 Slip-On Flange
146103	32mm Steel DIN 16 Slip-On Flange
146104	40mm Steel DIN 16 Slip-On Flange
146105	50mm Steel DIN 16 Slip-On Flange
146106	65mm Steel DIN 16 Slip-On Flange
146107	80mm Steel DIN 16 Slip-On Flange
146108	100mm Steel DIN 16 Slip-On Flange
146109	125mm Steel DIN 16 Slip-On Flange
146110	150mm Steel DIN 16 Slip-On Flange
146111	200mm Steel DIN 16 Slip-On Flange
146112	250mm Steel DIN 16 Slip-On Flange
146113	300mm Steel DIN 16 Slip-On Flange

Fire Australia Co Pty Ltd.
ABN No. 13165523713
47 Rushdale St. Knoxfield VIC-3180. Tel:(03) 9764 0020, Fax: (03) 9764 0023.
E-mail : sales@fireausco.com.au www.fireausco.com.au

EN 1092-1 PN16 Blind Flanges

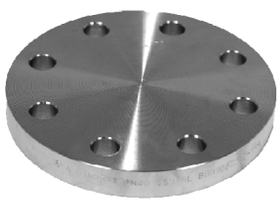

PART NO.	DESCRIPTION
146114	50mm Steel DIN 16 Blind Flange
146115	65mm Steel DIN 16 Blind Flange
146116	80mm Steel DIN 16 Blind Flange
146117	100mm Steel DIN 16 Blind Flange
146118	125mm Steel DIN 16 Blind Flange
146119	150mm Steel DIN 16 Blind Flange
146120	200mm Steel DIN 16 Blind Flange

EN 1092-1 PN16 Screwed BSPP Flanges

PART NO.	DESCRIPTION
146121	25mm Steel DIN 16 Raised Face Boss Flange Screwed BSP
146122	32mm Steel DIN 16 Raised Face Boss Flange Screwed BSP
146123	40mm Steel DIN 16 Raised Face Boss Flange Screwed BSP
146124	50mm Steel DIN 16 Raised Face Boss Flange Screwed BSP
146125	65mm Steel DIN 16 Raised Face Boss Flange Screwed BSP
146126	80mm Steel DIN 16 Raised Face Boss Flange Screwed BSP
146127	100mm Steel DIN 16 Raised Face Boss Flange Screwed BSP

EN 1092-1 PN25 Slip-On Weld Flanges

PART NO.	DESCRIPTION
146128	100mm Steel DIN 25 To 40 Slip-On Flange
146129	125mm Steel DIN 25 To 40 Slip-On Flange
146130	150mm Steel DIN 25 To 40 Slip-On Flange
146131	200mm Steel DIN 25 Slip-On Flange
146132	250mm Steel DIN 25 Slip-On Flange
146133	300mm Steel DIN 25 Slip-On Flange

EN 1092-1 PN25 Blind Flanges

PART NO.	DESCRIPTION
146134	100mm Steel DIN 25 To 40 Blind Flange
146135	125mm Steel DIN 25 To 40 Blind Flange
146136	150mm Steel DIN 25 To 40 Blind Flange
146137	200mm Steel DIN 25 Blind Flange
146138	250mm Steel DIN 25 Blind Flange
146139	300mm Steel DIN 25 Blind Flange

EN 1092-1 PN40 Slip-On Weld Flanges

PART NO.	DESCRIPTION
146140	200mm Steel DIN 40 Slip-On Flange
146141	250mm Steel DIN 40 Slip-On Flange
146142	300mm Steel DIN 40 Slip-On Flange

EN 1092-1 PN40 Blind Flanges

PART NO.	DESCRIPTION
146143	200mm Steel DIN 40 Blind Flange
146144	250mm Steel DIN 40 Blind Flange
146145	300mm Steel DIN 40 Blind Flange

Fire Australia Co Pty Ltd.
ABN No. 13165523713
47 Rushdale St. Knoxfield VIC-3180. Tel:(03) 9764 0020, Fax: (03) 9764 0023.
E-mail : sales@fireausco.com.au www.fireausco.com.au

FIRE AUSTRALIA CO

Class 150 Carbon Steel Slip-On Weld Raised Face Flanges

PART No.	DESCRIPTION
146146	15mm CS Forged ANSI 150 Slip-On Weld RF Flange
146147	20mm CS Forged ANSI 150 Slip-On Weld RF Flange
146148	25mm CS Forged ANSI 150 Slip-On Weld RF Flange
146150	40mm CS Forged ANSI 150 Slip-On Weld RF Flange
146151	50mm CS Forged ANSI 150 Slip-On Weld RF Flange
146152	65mm CS Forged ANSI 150 Slip-On Weld RF Flange
146153	80mm CS Forged ANSI 150 Slip-On Weld RF Flange
146154	100mm CS Forged ANSI 150 Slip-On Weld RF Flange
146155	125mm CS Forged ANSI 150 Slip-On Weld RF Flange
146156	150mm CS Forged ANSI 150 Slip-On Weld RF Flange
146157	200mm CS Forged ANSI 150 Slip-On Weld RF Flange
146158	250mm CS Forged ANSI 150 Slip-On Weld RF Flange
146159	300mm CS Forged ANSI 150 Slip-On Weld RF Flange
146160	350mm CS Forged ANSI 150 Slip-On Weld RF Flange
146161	400mm CS Forged ANSI 150 Slip-On Weld RF Flange

Class 150 Weld Neck Std. Wt. Raised Face Flanges

PART No.	DESCRIPTION
146162	15mm CS Forged ANSI 150 Std Wt Weld Neck Flange
146163	20mm CS Forged ANSI 150 Std Wt Weld Neck Flange
146164	25mm CS Forged ANSI 150 Std Wt Weld Neck Flange
146165	32mm CS Forged ANSI 150 Std Wt Weld Neck Flange
146166	40mm CS Forged ANSI 150 Std Wt Weld Neck Flange
146167	50mm CS Forged ANSI 150 Std Wt Weld Neck Flange
146168	65mm CS Forged ANSI 150 Std Wt Weld Neck Flange
146169	80mm CS Forged ANSI 150 Std Wt Weld Neck Flange
146170	100mm CS Forged ANSI 150 Std Wt Weld Neck Flange
146171	125mm CS Forged ANSI 150 Std Wt Weld Neck Flange
146172	150mm CS Forged ANSI 150 Std Wt Weld Neck Flange
146173	200mm CS Forged ANSI 150 Std Wt Weld Neck Flange
146174	250mm CS Forged ANSI 150 Std Wt Weld Neck Flange
146175	300mm CS Forged ANSI 150 Std Wt Weld Neck Flange
146176	350mm CS Forged ANSI 150 Std Wt Weld Neck Flange
146177	400mm CS Forged ANSI 150 Std Wt Weld Neck Flange

Class 150 Blind Raised Face Flanges

PART No.	DESCRIPTION
146178	15mm CS Forged ANSI 150 Blind RF Flange
146179	20mm CS Forged ANSI 150 Blind RF Flange
146180	25mm CS Forged ANSI 150 Blind RF Flange
146181	32mm CS Forged ANSI 150 Blind RF Flange
146182	40mm CS Forged ANSI 150 Blind RF Flange
146183	50mm CS Forged ANSI 150 Blind RF Flange
146184	65mm CS Forged ANSI 150 Blind RF Flange
146185	80mm CS Forged ANSI 150 Blind RF Flange
146186	100mm CS Forged ANSI 150 Blind RF Flange
146187	125mm CS Forged ANSI 150 Blind RF Flange
146188	150mm CS Forged ANSI 150 Blind RF Flange
146189	200mm CS Forged ANSI 150 Blind RF Flange
146190	250mm CS Forged ANSI 150 Blind RF Flange
146191	300mm CS Forged ANSI 150 Blind RF Flange
146192	350mm CS Forged ANSI 150 Blind RF Flange
146193	400mm CS Forged ANSI 150 Blind RF Flange

Fire Australia Co Pty Ltd.
ABN No. 13165523713
47 Rushdale St. Knoxfield VIC-3180. Tel:(03) 9764 0020, Fax: (03) 9764 0023.
E-mail : sales@fireausco.com.au www.fireausco.com.au

Class 300 Slip-On Weld Raised Face Flanges

PART No.	DESCRIPTION
146194	15mm CS Forged ANSI 300 Slip-On Weld Flange
146195	20mm CS Forged ANSI 300 Slip-On Weld Flange
146196	25mm CS Forged ANSI 300 Slip-On Weld Flange
146197	32mm CS Forged ANSI 300 Slip-On Weld Flange
146198	40mm CS Forged ANSI 300 Slip-On Weld Flange
146199	50mm CS Forged ANSI 300 Slip-On Weld Flange
146200	65mm CS Forged ANSI 300 Slip-On Weld Flange
146201	80mm CS Forged ANSI 300 Slip-On Weld Flange
146202	100mm CS Forged ANSI 300 Slip-On Weld Flange
146203	125mm CS Forged ANSI 300 Slip-On Weld Flange
146204	150mm CS Forged ANSI 300 Slip-On Weld Flange
146205	200mm CS Forged ANSI 300 Slip-On Weld Flange
146206	250mm CS Forged ANSI 300 Slip-On Weld Flange
146207	300mm CS Forged ANSI 300 Slip-On Weld Flange
146208	350mm CS Forged ANSI 300 Slip-On Weld Flange
146209	400mm CS Forged ANSI 300 Slip-On Weld Flange

Class 300 Weld Neck Extra Strong Raised Face Flanges

PART No.	DESCRIPTION
146210	15mm CS Forged ANSI 300 XS Weld Neck Flange
146211	20mm CS Forged ANSI 300 XS Weld Neck Flange
146212	25mm CS Forged ANSI 300 XS Weld Neck Flange
146213	32mm CS Forged ANSI 300 XS Weld Neck Flange
146214	40mm CS Forged ANSI 300 XS Weld Neck Flange
146215	50mm CS Forged ANSI 300 XS Weld Neck Flange
146216	65mm CS Forged ANSI 300 XS Weld Neck Flange
146217	80mm CS Forged ANSI 300 XS Weld Neck Flange
146218	100mm CS Forged ANSI 300 XS Weld Neck Flange
146219	125mm CS Forged ANSI 300 XS Weld Neck Flange
146220	150mm CS Forged ANSI 300 XS Weld Neck Flange
146221	200mm CS Forged ANSI 300 XS Weld Neck Flange
146222	250mm CS Forged ANSI 300 XS Weld Neck Flange
146223	300mm CS Forged ANSI 300 XS Weld Neck Flange

Class 300 Blind Raised Face Flanges

PART No.	DESCRIPTION
146224	15mm CS Forged ANSI 300 Blind RF Flange
146225	20mm CS Forged ANSI 300 Blind RF Flange
146226	25mm CS Forged ANSI 300 Blind RF Flange
146227	32mm CS Forged ANSI 300 Blind RF Flange
146228	40mm CS Forged ANSI 300 Blind RF Flange
146229	50mm CS Forged ANSI 300 Blind RF Flange
146230	80mm CS Forged ANSI 300 Blind RF Flange
146231	100mm CS Forged ANSI 300 Blind RF Flange
146232	150mm CS Forged ANSI 300 Blind RF Flange
146233	200mm CS Forged ANSI 300 Blind RF Flange
146234	250mm CS Forged ANSI 300 Blind RF Flange
146235	300mm CS Forged ANSI 300 Blind RF Flange

Fire Australia Co Pty Ltd.
ABN No. 13165523713
47 Rushdale St. Knoxfield VIC-3180. Tel:(03) 9764 0020, Fax: (03) 9764 0023.
E-mail : sales@fireausco.com.au www.fireausco.com.au

FIRE AUSTRALIA CO

Class 600 Slip-On Weld Raised Face Flanges

PART No.	DESCRIPTION
146236	15mm CS Forged ANSI 600 Slip-On Weld Flange
146237	20mm CS Forged ANSI 600 Slip-On Weld Flange
146238	25mm CS Forged ANSI 600 Slip-On Weld Flange
146239	32mm CS Forged ANSI 600 Slip-On Weld Flange
146240	50mm CS Forged ANSI 600 Slip-On Weld Flange
146241	65mm CS Forged ANSI 600 Slip-On Weld Flange
146242	80mm CS Forged ANSI 600 Slip-On Weld Flange
146243	100mm CS Forged ANSI 600 Slip-On Weld Flange
146244	125mm CS Forged ANSI 600 Slip-On Weld Flange
146245	150mm CS Forged ANSI 600 Slip-On Weld Flange
146246	200mm CS Forged ANSI 600 Slip-On Weld Flange
146247	250mm CS Forged ANSI 600 Slip-On Weld Flange
146248	300mm CS Forged ANSI 600 Slip-On Weld Flange

Class 600 Weld Neck Extra Strong Raised Face Flanges

PART No.	DESCRIPTION
146249	25mm CS Forged ANSI 600 XS Weld Neck Flange
146250	40mm CS Forged ANSI 600 XS Weld Neck Flange
146251	50mm CS Forged ANSI 600 XS Weld Neck Flange
146252	80mm CS Forged ANSI 600 XS Weld Neck Flange
146253	100mm CS Forged ANSI 600 XS Weld Neck Flange
146254	150mm CS Forged ANSI 600 XS Weld Neck Flange
146255	200mm CS Forged ANSI 600 XS Weld Neck Flange
146256	250mm CS Forged ANSI 600 XS Weld Neck Flange
146257	300mm CS Forged ANSI 600 XS Weld Neck Flange

Class 600 Blind Raised Face Flanges

PART No.	DESCRIPTION
146258	25mm CS Forged ANSI 600 Blind RF Flange
146259	32mm CS Forged ANSI 600 Blind RF Flange
146260	40mm CS Forged ANSI 600 Blind RF Flange
146261	50mm CS Forged ANSI 600 Blind RF Flange
146262	65mm CS Forged ANSI 600 Blind RF Flange
146263	80mm CS Forged ANSI 600 Blind RF Flange
146264	100mm CS Forged ANSI 600 Blind RF Flange
146265	125mm CS Forged ANSI 600 Blind RF Flange
146266	150mm CS Forged ANSI 600 Blind RF Flange
146267	200mm CS Forged ANSI 600 Blind RF Flange
146268	250mm CS Forged ANSI 600 Blind RF Flange
146269	300mm CS Forged ANSI 600 Blind RF Flange

Fire Australia Co Pty Ltd.
ABN No. 13165523713
47 Rushdale St. Knoxfield VIC-3180. Tel:(03) 9764 0020, Fax: (03) 9764 0023.
E-mail : sales@fireausco.com.au www.fireausco.com.au

Table E Slip-On Weld Flanges

PART No.	DESCRIPTION
146270	15mm 316 SS Table D/E Slip-On Weld Flange
146271	20mm 316 SS Table D/E Slip-On Weld Flange
146272	25mm 316 SS Table D/E Slip-On Weld Flange
146273	32mm 316 SS Table D/E Slip-On Weld Flange
146274	40mm 316 SS Table D/E Slip-On Weld Flange
146275	50mm 316 SS Table D/E Slip-On Weld Flange
146276	65mm 316 SS Table D/E Slip-On Weld Flange
146277	80mm 316 SS Table D/E Slip-On Weld Flange
146278	100mm 316 SS Table D/E Slip-On Weld Flange
146279	125mm 316 SS Table D/E Slip-On Weld Flange
146280	150mm 316 SS Table D/E Slip-On Weld Flange
146281	200mm 316 SS Table D/E Slip-On Weld Flange
146282	250mm 316 SS Table D/E Slip-On Weld Flange
146283	300mm 316 SS Table D/E Slip-On Weld Flange

Table D Slip-on Weld Flanges

PART No.	DESCRIPTION
146284	100mm 316 SS Table D Slip-on Weld Flange
146285	150mm 316 SS Table D Slip-on Weld Flange
146286	200mm 316 SS Table D Slip-on Weld Flange
146287	250mm 316 SS Table D Slip-on Weld Flange
146288	300mm 316 SS Table D Slip-on Weld Flange

Table E Blind Flanges

PART No.	DESCRIPTION
146289	25mm 316 SS Table E Blind Flange
146290	32mm 316 SS Table E Blind Flange
146291	40mm 316 SS Table E Blind Flange
146292	50mm 316 SS Table E Blind Flange
146293	65mm 316 SS Table E Blind Flange
146294	80mm 316 SS Table E Blind Flange
146295	100mm 316 SS Table E Blind Flange
146296	150mm 316 SS Table E Blind Flange
146297	200mm 316 SS Table E Blind Flange

Table D Blind Flanges

PART No.	DESCRIPTION
146298	100mm 316 SS Table D Blind Flange
146299	150mm 316 SS Table D Blind Flange
146300	200mm 316 SS Table D Blind Flange

Fire Australia Co Pty Ltd.
ABN No. 13165523713
47 Rushdale St. Knoxfield VIC-3180. Tel:(03) 9764 0020, Fax: (03) 9764 0023.
E-mail : sales@fireausco.com.au www.fireausco.com.au

Table E Screwed BSPP Flanges

PART NO.	DESCRIPTION
146301	15mm 316 SS Table E Boss Screwed Flange BSPP
146302	20mm 316 SS Table E Boss Screwed Flange BSPP
146303	25mm 316 SS Table E Boss Screwed Flange BSPP
146304	32mm 316 SS Table E Boss Screwed Flange BSPP
146305	40mm 316 SS Table E Boss Screwed Flange BSPP
146306	50mm 316 SS Table E Boss Screwed Flange BSPP
146307	65mm 316 SS Table E Boss Screwed Flange BSPP
146308	80mm 316 SS Table E Boss Screwed Flange BSPP
146309	100mm 316 SS Table E Boss Screwed Flange BSPP
146310	150mm 316 SS Table E Boss Screwed Flange BSPP

ANSI 150 SS Slip-On Weld Flanges

PART NO.	DESCRIPTION
146311	20mm 316 SS ANSI 150 Slip-On Weld R/F Flange
146312	25mm 316 SS ANSI 150 Slip-On Weld R/F Flange
146313	32mm 316 SS ANSI 150 Slip-On Weld R/F Flange
146314	40mm 316 SS ANSI 150 Slip-On Weld R/F Flange
146315	50mm 316 SS ANSI 150 Slip-On Weld R/F Flange
146316	65mm 316 SS ANSI 150 Slip-On Weld R/F Flange
146317	80mm 316 SS ANSI 150 Slip-On Weld R/F Flange
146318	100mm 316 SS ANSI 150 Slip-On Weld R/F Flange
146319	150mm 316 SS ANSI 150 Slip-On Weld R/F Flange
146320	200mm 316 SS ANSI 150 Slip-On Weld R/F Flange
146321	250mm 316 SS ANSI 150 Slip-On Weld R/F Flange
146322	300mm 316 SS ANSI 150 Slip-On Weld R/F Flange

ANSI 150 SS Blind Flanges

PART NO.	DESCRIPTION
146323	20mm 316 SS ANSI 150 Blind R/F Flange
146324	25mm 316 SS ANSI 150 Blind R/F Flange
146325	32mm 316 SS ANSI 150 Blind R/F Flange
146326	40mm 316 SS ANSI 150 Blind R/F Flange
146327	50mm 316 SS ANSI 150 Blind R/F Flange
146328	65mm 316 SS ANSI 150 Blind R/F Flange
146329	80mm 316 SS ANSI 150 Blind R/F Flange
146330	100mm 316 SS ANSI 150 Blind R/F Flange
146331	150mm 316 SS ANSI 150 Blind R/F Flange
146332	200mm 316 SS ANSI 150 Blind R/F Flange
146333	250mm 316 SS ANSI 150 Blind R/F Flange
146334	300mm 316 SS ANSI 150 Blind R/F Flange

ANSI 150 SS Screwed BSPP Flanges

PART NO.	DESCRIPTION
146335	20mm 316 SS ANSI 150 Screwed Flange BSPP
146336	25mm 316 SS ANSI 150 Screwed Flange BSPP
146337	40mm 316 SS ANSI 150 Screwed Flange BSPP
146338	50mm 316 SS ANSI 150 Screwed Flange BSPP
146339	80mm 316 SS ANSI 150 Screwed Flange BSPP
146340	100mm 316 SS ANSI 150 Screwed Flange BSPP

Fire Australia Co Pty Ltd.
ABN No. 13165523713
47 Rushdale St. Knoxfield VIC-3180. Tel:(03) 9764 0020, Fax: (03) 9764 0023.
E-mail : sales@fireausco.com.au www.fireausco.com.au

ANSI 150 SS Screwed NPT Flanges

PART No.	DESCRIPTION
146341	25mm 316 SS ANSI 150 Screwed Flange NPT
146342	40mm 316 SS ANSI 150 Screwed Flange NPT
146343	50mm 316 SS ANSI 150 Screwed Flange NPT
146344	80mm 316 SS ANSI 150 Screwed Flange NPT
146345	100mm 316 SS ANSI 150 Screwed Flange NPT

ANSI 150 SS Weld Neck Sch.40 Flanges

PART No.	DESCRIPTION
146346	50mm 316 SS ANSI 150 Weld Neck R/F Sch.40 Flange
146347	80mm 316 SS ANSI 150 Weld Neck R/F Sch.40 Flange
146348	100mm 316 SS ANSI 150 Weld Neck R/F Sch.40 Flange
146349	150mm 316 SS ANSI 150 Weld Neck R/F Sch.40 Flange

EN 1092-1 PN16 Slip-On Weld DIN Flanges

PART No.	DESCRIPTION
146350	25mm 316 SS DIN 16 Slip-On Weld Flange
146351	32mm 316 SS DIN 16 Slip-On Weld Flange
146352	40mm 316 SS DIN 16 Slip-On Weld Flange
146353	50mm 316 SS DIN 16 Slip-On Weld Flange
146354	80mm 316 SS DIN 16 Slip-On Weld Flange
146355	100mm 316 SS DIN 16 Slip-On Weld Flange
146356	150mm 316 SS DIN 16 Slip-On Weld Flange

EN 1092-1 PN 16 Blind DIN Flanges

PART No.	DESCRIPTION
146357	25mm 316 SS DIN 16 Blind Flange
146358	40mm 316 SS DIN 16 Blind Flange
146359	50mm 316 SS DIN 16 Blind Flange
146360	80mm 316 SS DIN 16 Blind Flange
146361	100mm 316 SS DIN 16 Blind Flange
146362	150mm 316 SS DIN 16 Blind Flange

EN 1092-1 PN 16 Screwed BSPP DIN Flanges

PART No.	DESCRIPTION
146363	25mm 316 SS DIN 16 Boss Screwed Flange BSPP
146364	40mm 316 SS DIN 16 Boss Screwed Flange BSPP
146365	50mm 316 SS DIN 16 Boss Screwed Flange BSPP
146366	80mm 316 SS DIN 16 Boss Screwed Flange BSPP
146367	100mm 316 SS DIN 16 Boss Screwed Flange BSPP

Fire Australia Co Pty Ltd.
ABN No. 13165523713
47 Rushdale St. Knoxfield VIC-3180. Tel:(03) 9764 0020, Fax: (03) 9764 0023.
E-mail : sales@fireausco.com.au www.fireausco.com.au

FIRE AUSTRALIA CO

Table D Full Face 3mm Thick

PART No.	DESCRIPTION
146368	100mm Table D Full Face Rubber Gasket
146369	125mm Table D Full Face Rubber Gasket
146370	150mm Table D Full Face Rubber Gasket
146371	200mm Table D Full Face Rubber Gasket
146372	225mm Table D Full Face Rubber Gasket
146373	250mm Table D Full Face Rubber Gasket
146374	300mm Table D Full Face Rubber Gasket

Table E Full Face 3mm Thick

PART No.	DESCRIPTION
146375	15mm Table E Full Face Rubber Gasket
146376	20mm Table E Full Face Rubber Gasket
146377	25mm Table E Full Face Rubber Gasket
146378	32mm Table E Full Face Rubber Gasket
146379	40mm Table E Full Face Rubber Gasket
146380	50mm Table E Full Face Rubber Gasket
146381	65mm Table E Full Face Rubber Gasket
146382	80mm Table E Full Face Rubber Gasket
146383	100mm Table E Full Face Rubber Gasket
146384	125mm Table E Full Face Rubber Gasket
146385	150mm Table E Full Face Rubber Gasket
146386	200mm Table E Full Face Rubber Gasket
146387	225mm Table E Full Face Rubber Gasket
146388	250mm Table E Full Face Rubber Gasket
146389	300mm Table E Full Face Rubber Gasket

DIN 16 Full Face 3mm Thick

PART No.	DESCRIPTION
146390	15mm DIN 16 Full Face Rubber Gasket
146391	20mm DIN 16 Full Face Rubber Gasket
146392	25mm DIN 16 Full Face Rubber Gasket
146393	32mm DIN 16 Full Face Rubber Gasket
146394	40mm DIN 16 Full Face Rubber Gasket
146395	50mm DIN 16 Full Face Rubber Gasket
146396	65mm DIN 16 Full Face Rubber Gasket
146397	80mm DIN 16 Full Face Rubber Gasket
146398	100mm DIN 16 Full Face Rubber Gasket
146399	125mm DIN 16 Full Face Rubber Gasket
146400	150mm DIN 16 Full Face Rubber Gasket
146401	200mm DIN 16 Full Face Rubber Gasket
146402	225mm DIN 16 Full Face Rubber Gasket
146403	250mm DIN 16 Full Face Rubber Gasket
146404	300mm DIN 16 Full Face Rubber Gasket

Fire Australia Co Pty Ltd.
ABN No. 13165523713
47 Rushdale St. Knoxfield VIC-3180. Tel:(03) 9764 0020, Fax: (03) 9764 0023.
E-mail : sales@fireausco.com.au www.fireausco.com.au

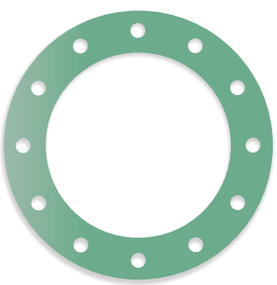

Table E Full Face 1.5mm Thick

PART No.	DESCRIPTION
146405	15mm Table E Full Face Fibre Gasket
146406	20mm Table E Full Face Fibre Gasket
146407	25mm Table E Full Face Fibre Gasket
146408	32mm Table E Full Face Fibre Gasket
146409	40mm Table E Full Face Fibre Gasket
146410	50mm Table E Full Face Fibre Gasket
146411	65mm Table E Full Face Fibre Gasket
146412	80mm Table E Full Face Fibre Gasket
146413	100mm Table E Full Face Fibre Gasket
146414	125mm Table E Full Face Fibre Gasket
146415	150mm Table E Full Face Fibre Gasket
146416	200mm Table E Full Face Fibre Gasket
146417	225mm Table E Full Face Fibre Gasket
146418	250mm Table E Full Face Fibre Gasket
146419	300mm Table E Full Face Fibre Gasket

Table H Full Face 1.5mm Thick

PART No.	DESCRIPTION
146420	15mm Table H Full Face Fibre Gasket
146421	20mm Table H Full Face Fibre Gasket
146422	25mm Table H Full Face Fibre Gasket
146423	32mm Table H Full Face Fibre Gasket
146424	40mm Table H Full Face Fibre Gasket
146425	50mm Table H Full Face Fibre Gasket
146426	65mm Table H Full Face Fibre Gasket
146427	80mm Table H Full Face Fibre Gasket
146428	100mm Table H Full Face Fibre Gasket
146429	150mm Table H Full Face Fibre Gasket
146430	200mm Table H Full Face Fibre Gasket
146431	225mm Table H Full Face Fibre Gasket
146432	250mm Table H Full Face Fibre Gasket
146433	300mm Table H Full Face Fibre Gasket

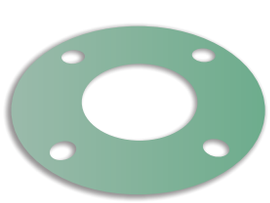

DIN 16 Full Face 1.5mm Thick

PART No.	DESCRIPTION
146434	15mm DIN 16 Full Face Fibre Gasket
146435	20mm DIN 16 Full Face Fibre Gasket
146436	25mm DIN 16 Full Face Fibre Gasket
146437	32mm DIN 16 Full Face Fibre Gasket
146438	40mm DIN 16 Full Face Fibre Gasket
146439	50mm DIN 16 Full Face Fibre Gasket
146440	65mm DIN 16 Full Face Fibre Gasket
146441	80mm DIN 16 Full Face Fibre Gasket
146442	125mm DIN 16 Full Face Fibre Gasket
146443	100mm DIN 16 Full Face Fibre Gasket
146444	150mm DIN 16 Full Face Fibre Gasket
146445	200mm DIN 16 Full Face Fibre Gasket
146446	225mm DIN 16 Full Face Fibre Gasket
146447	250mm DIN 16 Full Face Fibre Gasket
146448	300mm DIN 16 Full Face Fibre Gasket

Fire Australia Co Pty Ltd.
ABN No. 13165523713
47 Rushdale St. Knoxfield VIC-3180. Tel:(03) 9764 0020, Fax: (03) 9764 0023.
E-mail : sales@fireausco.com.au www.fireausco.com.au

DIN 16 Ring 1.5mm Thick

PART No.	DESCRIPTION
146449	15mm DIN 16 Fibre Ring Gasket
146450	20mm DIN 16 Fibre Ring Gasket
146451	25mm DIN 16 Fibre Ring Gasket
146452	32mm DIN 16 Fibre Ring Gasket
146453	40mm DIN 16 Fibre Ring Gasket
146454	50mm DIN 16 Fibre Ring Gasket
146455	65mm DIN 16 Fibre Ring Gasket
146456	80mm DIN 16 Fibre Ring Gasket
146457	100mm DIN 16 Fibre Ring Gasket
146458	125mm DIN 16 Fibre Ring Gasket
146459	150mm DIN 16 Fibre Ring Gasket
146460	200mm DIN 16 Fibre Ring Gasket

NON ASBESTOS FIBRE GASKETS FOR ANSI 150 FLANGES

ANSI 150 Full Face 1.5mm Thick

PART No.	DESCRIPTION
146461	15mm ANSI 150# Full Face Fibre Gasket
146462	20mm ANSI 150# Full Face Fibre Gasket
146463	25mm ANSI 150# Full Face Fibre Gasket
146464	32mm ANSI 150# Full Face Fibre Gasket
146465	40mm ANSI 150# Full Face Fibre Gasket
146466	50mm ANSI 150# Full Face Fibre Gasket
146467	65mm ANSI 150# Full Face Fibre Gasket
146468	80mm ANSI 150# Full Face Fibre Gasket
146469	100mm ANSI 150# Full Face Fibre Gasket
146470	125mm ANSI 150# Full Face Fibre Gasket
146471	150mm ANSI 150# Full Face Fibre Gasket
146472	200mm ANSI 150# Full Face Fibre Gasket
146473	225mm ANSI 150# Full Face Fibre Gasket
146474	250mm ANSI 150# Full Face Fibre Gasket
146475	300mm ANSI 150# Full Face Fibre Gasket

ANSI 150 Ring 1.5mm Thick

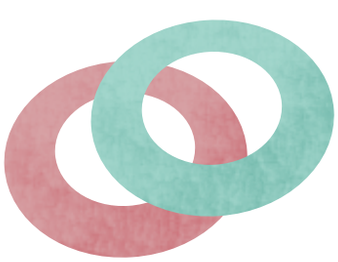

PART No.	DESCRIPTION
146476	15mm ANSI 150# Fibre Ring Gasket
146477	20mm ANSI 150# Fibre Ring Gasket
146478	25mm ANSI 150# Fibre Ring Gasket
146479	32mm ANSI 150# Fibre Ring Gasket
146480	40mm ANSI 150# Fibre Ring Gasket
146481	50mm ANSI 150# Fibre Ring Gasket
146482	65mm ANSI 150# Fibre Ring Gasket
146483	80mm ANSI 150# Fibre Ring Gasket
146484	100mm ANSI 150# Fibre Ring Gasket
146485	125mm ANSI 150# Fibre Ring Gasket
146486	150mm ANSI 150# Fibre Ring Gasket
146487	200mm ANSI 150# Fibre Ring Gasket
146488	225mm ANSI 150# Fibre Ring Gasket
146489	250mm ANSI 150# Fibre Ring Gasket
146490	300mm ANSI 150# Fibre Ring Gasket

ANSI 300 Ring 1.5mm Thick

PART No.	DESCRIPTION
146491	15mm ANSI 300# Fibre Ring Gasket
146492	20mm ANSI 300# Fibre Ring Gasket
146493	25mm ANSI 300# Fibre Ring Gasket
146494	32mm ANSI 300# Fibre Ring Gasket
146495	40mm ANSI 300# Fibre Ring Gasket
146496	50mm ANSI 300# Fibre Ring Gasket
146497	65mm ANSI 300# Fibre Ring Gasket
146498	80mm ANSI 300# Fibre Ring Gasket
146499	100mm ANSI 300# Fibre Ring Gasket
146500	125mm ANSI 300# Fibre Ring Gasket
146501	150mm ANSI 300# Fibre Ring Gasket
146502	200mm ANSI 300# Fibre Ring Gasket
146503	225mm ANSI 300# Fibre Ring Gasket
146504	250mm ANSI 300# Fibre Ring Gasket
146505	300mm ANSI 300# Fibre Ring Gasket

Fire Australia Co Pty Ltd.
ABN No. 13165523713
47 Rushdale St. Knoxfield VIC-3180. Tel:(03) 9764 0020, Fax: (03) 9764 0023.
E-mail : sales@fireausco.com.au www.fireausco.com.au

FIRE AUSTRALIA CO

ANSI 150 - C/S Outer Ring, S/S Inner Ring, Graphite Winding Spiral Wound Gasket

PART No.	DESCRIPTION
146506	15mm ANSI 150# Spiral Wound Gasket
146507	20mm ANSI 150# Spiral Wound Gasket
146508	25mm ANSI 150# Spiral Wound Gasket
146509	32mm ANSI 150# Spiral Wound Gasket
146510	40mm ANSI 150# Spiral Wound Gasket
146511	50mm ANSI 150# Spiral Wound Gasket
146512	65mm ANSI 150# Spiral Wound Gasket
146513	80mm ANSI 150# Spiral Wound Gasket
146514	100mm ANSI 150# Spiral Wound Gasket
146515	125mm ANSI 150# Spiral Wound Gasket
146516	150mm ANSI 150# Spiral Wound Gasket
146517	200mm ANSI 150# Spiral Wound Gasket
146518	250mm ANSI 150# Spiral Wound Gasket
146519	300mm ANSI 150# Spiral Wound Gasket

ANSI 300 - C/S Outer Ring, S/S Inner Ring, Graphite Winding Spiral Wound Gasket

PART No.	DESCRIPTION
146520	15mm ANSI 300# Spiral Wound Gasket
146521	20mm ANSI 300# Spiral Wound Gasket
146522	25mm ANSI 300# Spiral Wound Gasket
146523	32mm ANSI 300# Spiral Wound Gasket
146524	40mm ANSI 300# Spiral Wound Gasket
146525	50mm ANSI 300# Spiral Wound Gasket
146526	65mm ANSI 300# Spiral Wound Gasket
146527	80mm ANSI 300# Spiral Wound Gasket
146528	100mm ANSI 300# Spiral Wound Gasket
146529	125mm ANSI 300# Spiral Wound Gasket
146530	150mm ANSI 300# Spiral Wound Gasket
146531	200mm ANSI 300# Spiral Wound Gasket
146532	250mm ANSI 300# Spiral Wound Gasket
146533	300mm ANSI 300# Spiral Wound Gasket

Table D - Copper Flange Adaptors

PART No.	DESCRIPTION
146534	100mm Table D Copper Flange Adaptor
146535	125mm Table D Copper Flange Adaptor
146536	150mm Table D Copper Flange Adaptor

Table D/E - Copper Flange Adaptors

PART No.	DESCRIPTION
146537	32mm Table D/E Copper Flange Adaptor
146538	40mm Table D/E Copper Flange Adaptor
146539	50mm Table D/E Copper Flange Adaptor
146540	65mm Table D/E Copper Flange Adaptor
146541	80mm Table D/E Copper Flange Adaptor

Table E - Copper Flange Adaptors

PART No.	DESCRIPTION
146542	100mm Table E Copper Flange Adaptor
146543	125mm Table E Copper Flange Adaptor
146544	150mm Table E Copper Flange Adaptor

DIN 16 - Copper Flange Adaptors

PART No.	DESCRIPTION
146545	65mm DIN 16 Coppler Flange Adaptor
146546	80mm DIN 16 Coppler Flange Adaptor
146547	100mm DIN 16 Coppler Flange Adaptor
146548	125mm DIN 16 Coppler Flange Adaptor
146549	150mm DIN 16 Coppler Flange Adaptor

ANSI 150 - Copper Flange Adaptors

PART No.	DESCRIPTION
146550	32mm ANSI 150 Coppler Flange Adaptor
146551	40mm ANSI 150 Coppler Flange Adaptor
146552	50mm ANSI 150 Coppler Flange Adaptor
146553	65mm ANSI 150 Coppler Flange Adaptor
146554	80mm ANSI 150 Coppler Flange Adaptor
146555	100mm ANSI 150 Coppler Flange Adaptor
146556	125mm ANSI 150 Coppler Flange Adaptor
146557	150mm ANSI 150 Coppler Flange Adaptor

Fire Australia Co Pty Ltd.
ABN No. 13165523713
47 Rushdale St. Knoxfield VIC-3180. Tel:(03) 9764 0020, Fax: (03) 9764 0023.
E-mail : sales@fireausco.com.au www.fireausco.com.au

STAINLESS STEEL TUBE & TUBE FITTINGS

STAINLESS STEEL TUBE FITTINGS	177 - 179
STAINLESS STEEL TUBE	179

FIRE AUSTRALIA CO

Stainless Steel 316 90° Polished Tube Bends

PART No.	DESCRIPTION
208855	6mm 90° SS 316 Polished Tube Bend
208856	9mm 90° SS 316 Polished Tube Bend
208857	12mm 90° SS 316 Polished Tube Bend
208858	18mm 90° SS 316 Polished Tube Bend
208859	25mm 90° SS 316 Polished Tube Bend
208860	31mm 90° SS 316 Polished Tube Bend
208861	38mm 90° SS 316 Polished Tube Bend
208862	50mm 90° SS 316 Polished Tube Bend
208863	63mm 90° SS 316 Polished Tube Bend
208864	76mm 90° SS 316 Polished Tube Bend
208865	100mm 90° SS 316 Polished Tube Bend
208866	125mm 90° SS 316 Polished Tube Bend
208867	150mm 90° SS 316 Polished Tube Bend
208868	200mm 90° SS 316 Polished Tube Bend
208869	250mm 90° SS 316 Polished Tube Bend
208870	300mm 90° SS 316 Polished Tube Bend

Stainless Steel 316 45° Polished Tube Bends

PART No.	DESCRIPTION
208871	12mm 45° SS 316 Polished Tube Bend
208872	18mm 45° SS 316 Polished Tube Bend
208873	25mm 45° SS 316 Polished Tube Bend
208874	31mm 45° SS 316 Polished Tube Bend
208875	38mm 45° SS 316 Polished Tube Bend
208876	50mm 45° SS 316 Polished Tube Bend
208877	63mm 45° SS 316 Polished Tube Bend
208878	76mm 45° SS 316 Polished Tube Bend
208879	100mm 45° SS 316 Polished Tube Bend
208880	125mm 45° SS 316 Polished Tube Bend
208881	150mm 45° SS 316 Polished Tube Bend

Stainless Steel 316 180° Polished Tube Bends

PART No.	DESCRIPTION
208882	18mm 180° SS 316 Polished Tube Bend
208883	25mm 180° SS 316 Polished Tube Bend
208884	31mm 180° SS 316 Polished Tube Bend
208885	38mm 180° SS 316 Polished Tube Bend
208886	50mm 180° SS 316 Polished Tube Bend
208887	63mm 180° SS 316 Polished Tube Bend
208888	76mm 180° SS 316 Polished Tube Bend
208889	100mm 180° SS 316 Polished Tube Bend

Stainless Steel 316 Tube Equal Tees

PART No.	DESCRIPTION
208890	12mm SS 316 Tube Equal Tee
208891	18mm SS 316 Tube Equal Tee
208892	25mm SS 316 Tube Equal Tee
208893	31mm SS 316 Tube Equal Tee
208894	38mm SS 316 Tube Equal Tee
208895	50mm SS 316 Tube Equal Tee
208896	63mm SS 316 Tube Equal Tee
208897	76mm SS 316 Tube Equal Tee
208898	100mm SS 316 Tube Equal Tee
208899	125mm SS 316 Tube Equal Tee
208900	150mm SS 316 Tube Equal Tee

Stainless Steel 316 Tube Concentric Reducers

PART No.	DESCRIPTION
208901	9 X 6mm SS 316 Tube Concentric Reducer
208902	12 X 6mm SS 316 Tube Concentric Reducer
208903	12 X 9mm SS 316 Tube Concentric Reducer
208904	18 X 12mm SS 316 Tube Concentric Reducer
208905	25 X 18mm SS 316 Tube Concentric Reducer
208906	25 X 12mm SS 316 Tube Concentric Reducer
208907	31 X 25mm SS 316 Tube Concentric Reducer
208908	31 X 18mm SS 316 Tube Concentric Reducer
208909	31 X 12mm SS 316 Tube Concentric Reducer
208910	38 X 31mm SS 316 Tube Concentric Reducer
208911	38 X 25mm SS 316 Tube Concentric Reducer
208912	38 X 18mm SS 316 Tube Concentric Reducer
208913	38 X 12mm SS 316 Tube Concentric Reducer
208914	50 X 38mm SS 316 Tube Concentric Reducer
208915	50 X 31mm SS 316 Tube Concentric Reducer
208916	50 X 25mm SS 316 Tube Concentric Reducer
208917	50 X 18mm SS 316 Tube Concentric Reducer
208918	50 X 12mm SS 316 Tube Concentric Reducer
208919	63 X 50mm SS 316 Tube Concentric Reducer
208920	63 X 38mm SS 316 Tube Concentric Reducer
208921	63 X 31mm SS 316 Tube Concentric Reducer
208922	63 X 25mm SS 316 Tube Concentric Reducer
208923	76 X 63mm SS 316 Tube Concentric Reducer
208924	76 X 50mm SS 316 Tube Concentric Reducer
208925	76 X 38mm SS 316 Tube Concentric Reducer
208926	76 X 25mm SS 316 Tube Concentric Reducer
208927	100 X 76mm SS 316 Tube Concentric Reducer
208928	100 X 63mm SS 316 Tube Concentric Reducer
208929	100 X 50mm SS 316 Tube Concentric Reducer
208930	100 X 38mm SS 316 Tube Concentric Reducer
208931	100 X 25mm SS 316 Tube Concentric Reducer
208932	125 X 100mm SS 316 Tube Concentric Reducer
208933	125 X 76mm SS 316 Tube Concentric Reducer
208934	125 X 63mm SS 316 Tube Concentric Reducer
208935	125 X 50mm SS 316 Tube Concentric Reducer
208936	125 X 38mm SS 316 Tube Concentric Reducer
208937	125 X 25mm SS 316 Tube Concentric Reducer
208938	150 X 125mm SS 316 Tube Concentric Reducer
208939	150 X 100mm SS 316 Tube Concentric Reducer
208940	150 X 76mm SS 316 Tube Concentric Reducer
208941	150 X 63mm SS 316 Tube Concentric Reducer
208942	150 X 50mm SS 316 Tube Concentric Reducer
208943	150 X 38mm SS 316 Tube Concentric Reducer
208944	150 X 25mm SS 316 Tube Concentric Reducer

Fire Australia Co Pty Ltd.
ABN No. 13165523713
47 Rushdale St. Knoxfield VIC-3180. Tel:(03) 9764 0020, Fax: (03) 9764 0023.
E-mail : sales@fireausco.com.au www.fireausco.com.au

FIRE AUSTRALIA CO

Stainless Steel 316 Tube Eccentric Reducers

PART No.	DESCRIPTION
208951	9 X 6mm SS 316 Tube Eccentric Reducer
208952	12 X 6mm SS 316 Tube Eccentric Reducer
208953	12 X 9mm SS 316 Tube Eccentric Reducer
208954	18 X 12mm SS 316 Tube Eccentric Reducer
208955	25 X 18mm SS 316 Tube Eccentric Reducer
208956	25 X 12mm SS 316 Tube Eccentric Reducer
208957	31 X 25mm SS 316 Tube Eccentric Reducer
208958	31 X 18mm SS 316 Tube Eccentric Reducer
208959	31 X 12mm SS 316 Tube Eccentric Reducer
208960	38 X 31mm SS 316 Tube Eccentric Reducer
208961	38 X 25mm SS 316 Tube Eccentric Reducer
208962	38 X 18mm SS 316 Tube Eccentric Reducer
208963	38 X 12mm SS 316 Tube Eccentric Reducer
208964	50 X 38mm SS 316 Tube Eccentric Reducer
208965	50 X 31mm SS 316 Tube Eccentric Reducer
208966	50 X 25mm SS 316 Tube Eccentric Reducer
208967	50 X 18mm SS 316 Tube Eccentric Reducer
208968	50 X 12mm SS 316 Tube Eccentric Reducer
208969	63 X 50mm SS 316 Tube Eccentric Reducer
208970	63 X 38mm SS 316 Tube Eccentric Reducer
208971	63 X 31mm SS 316 Tube Eccentric Reducer
208972	63 X 25mm SS 316 Tube Eccentric Reducer
208973	76 X 63mm SS 316 Tube Eccentric Reducer
208974	76 X 50mm SS 316 Tube Eccentric Reducer
208975	76 X 38mm SS 316 Tube Eccentric Reducer
208976	76 X 25mm SS 316 Tube Eccentric Reducer
208977	100 X 76mm SS 316 Tube Eccentric Reducer
208978	100 X 63mm SS 316 Tube Eccentric Reducer
208979	100 X 50mm SS 316 Tube Eccentric Reducer
208980	100 X 38mm SS 316 Tube Eccentric Reducer
208981	100 X 25mm SS 316 Tube Eccentric Reducer
208982	125 X 100mm SS 316 Tube Eccentric Reducer
208983	125 X 76mm SS 316 Tube Eccentric Reducer
208984	125 X 63mm SS 316 Tube Eccentric Reducer
208985	125 X 50mm SS 316 Tube Eccentric Reducer
208986	125 X 38mm SS 316 Tube Eccentric Reducer
208987	125 X 25mm SS 316 Tube Eccentric Reducer
208988	150 X 125mm SS 316 Tube Eccentric Reducer
208989	150 X 100mm SS 316 Tube Eccentric Reducer
208990	150 X 76mm SS 316 Tube Eccentric Reducer
208991	150 X 63mm SS 316 Tube Eccentric Reducer
208992	150 X 50mm SS 316 Tube Eccentric Reducer
208993	150 X 38mm SS 316 Tube Eccentric Reducer
208994	150 X 25mm SS 316 Tube Eccentric Reducer

Tube Stainless Steel 316

PART No.	DESCRIPTION
208993	12mm Stainless Steel 316 Polished Tube
208994	19mm Stainless Steel 316 Polished Tube
208995	25mm Stainless Steel 316 Polished Tube
208996	32mm Stainless Steel 316 Polished Tube
208997	38mm Stainless Steel 316 Polished Tube
208998	50mm Stainless Steel 316 Polished Tube
208999	63mm Stainless Steel 316 Polished Tube
209000	76.1mm Stainless Steel 316 Polished Tube
209001	101.6mm Stainless Steel 316 Polished Tube

CABINETS

- DUAL & QUAD HYDRANT BOOSTER CABINETS 181 - 183
- EMERGENCY INFORMATION, ESSENTIAL SERVICES & 185
  FIRE EXTINGUISHER CABINETS 185
- FIRE HOSE REEL CABINETS 184
- FIRE HYDRANT & HOSE CABINETS 182
- MANIFEST CABINETS & ACCESSORIES 186-187
- SPRINKLER CABINETS 188
- TANK SUCTION CABINETS 183

FIRE AUSTRALIA CO

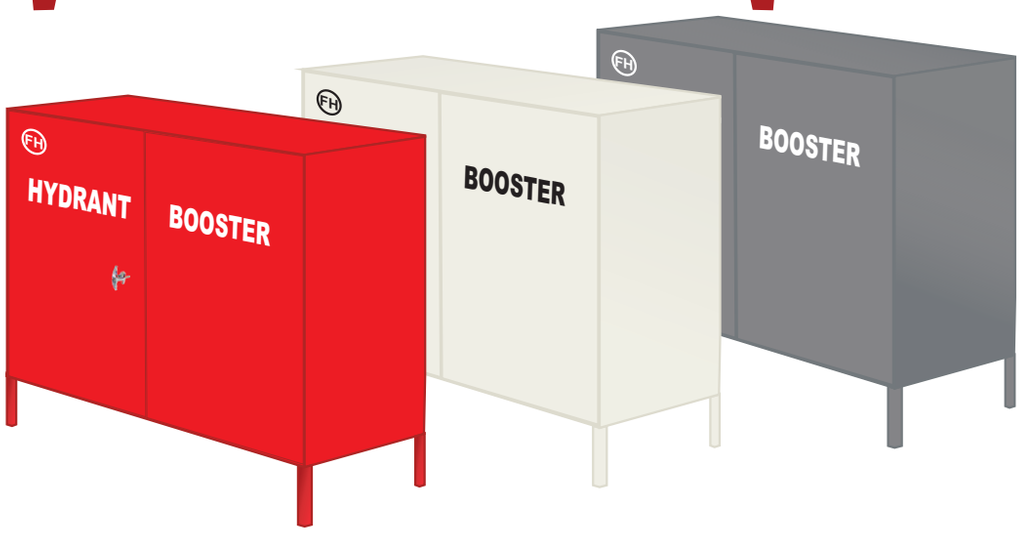

Cabinets Color options Fire Red, Cream, Grey or any other Color as required. P.O.A.

PART No.	DESCRIPTION		
	Victoria		
130325	Dual Booster Cabinet	- 1600mm(W) X 1400mm(H) **Includes 200mm Legs**	X 550mm(D)
130333	Quad Booster Cabinet	- 2300mm(W) X 1530mm(H) **Including 300mm Legs**	X 700mm(D)
130335	Quad Booster & Tank Suction Cabinet	- 2800mm(W) X 1500mm(H) **Including 300mm Legs**	X 700mm(D)
	New South Wales		
130343	Dual Booster Cabinet	- 1600mm(W) X 1500mm(H) **Includes 50mm Legs**	X 650mm(D)
130350	Quad Booster Cabinet	- 2400mm(W) X 1500mm(H) **Includes 50mm Legs**	X 700mm(D)
	Queensland		
130337	Dual/Quad Booster Cabinet	- 2100mm(W) X 1500mm(H) **Includes 100mm Legs**	X 800mm(D)
	Western Australia		
130341	Dual/Quad Booster Cabinet	- 2000mm(W) X 1500mm(H) **Includes 50mm Legs**	X 700mm(D)
	South Australia		
130342	Dual Booster Cabinet	- 1800mm(W) X 1400mm(H) **Includes 100mm Legs**	X 650mm(D)
130332	Quad Booster Cabinet	- 2000mm(W) X 1650mm(H) **Includes 300mm Legs**	X 800mm(D)

ALL CABINETS ARE POWDER COATED RED

Fire Australia Co Pty Ltd.
ABN No. 13165523713
47 Rushdale St. Knoxfield VIC-3180. Tel:(03) 9764 0020, Fax: (03) 9764 0023.
E-mail : sales@fireausco.com.au www.fireausco.com.au

HYDRANT BOOSTER CABINETS

Dual Booster & Hydrant Cabinet

PART No.	DESCRIPTION
130343	100NB Dual Booster Cabinet - **NSW** 1600mm(W) X 1500mm(H) **Includes 50mm Legs** X 650mm(D)
130342	100NB Dual Booster Cabinet - **SA** 1800mm(W) X 1400mm(H) **Includes 100mm Legs** X 650mm(D)
130325	100NB Dual Booster Cabinet - **VIC** 1600mm(W) X 1400mm(H) **Includes 200mm Legs** X 550mm(D)

Quad Booster & Feed Hydrant Cabinet

PART No.	DESCRIPTION
130333	150NB Quad Booster Cabinet - **VIC** 2300mm(W) X 1530mm(H) **Including 300mm Legs** X 700mm(D)
130335	150NB Quad Booster & Tank Suction Cabinet - **VIC** 2800mm(W) X 1500mm(H) **Including 300mm Legs** X 700mm(D)
130337	100NB/150NB Dual/Quad Booster Cabinet - **QLD** 2100mm(W) X 1500mm(H) **Includes 100mm Legs** X 800mm(D)

Dual Hydrant Cabinet

PART No.	DESCRIPTION
130326	Dual Hydrant Cabinet 900mm (W) X 1500mm (H) **Including 300mm Legs** X 400mm (D)
130372	Vertical H- Pattern/Booster Point Cabinet - **QLD** 900mm (W) X 1500mm (H) **Including 300mm Legs** X 600mm (D)

Fire Hydrant & Hose Cabinet

PART No.	DESCRIPTION
130334	Fire Hydrant & Hose Cabinet **(Item 14)** 705mm (W) X 1520mm (H) X 400mm (D)

ALL CABINETS ARE POWDER COATED RED

Cabinets Color options Fire Red, Cream, Grey or any other Color as required. P.O.A.

Fire Australia Co Pty Ltd.
ABN No. 13165523713
47 Rushdale St. Knoxfield VIC-3180. Tel:(03) 9764 0020, Fax: (03) 9764 0023.
E-mail : sales@fireausco.com.au www.fireausco.com.au

Hydrant & Booster Assembly Cabinet

PART No.	DESCRIPTION
130342	Dual Booster & Feed Hydrant Cabinet - **SA** 1800mm (W) x1400mm (H) **Includes 100mm Legs** x 650mm (D)
130332	Quad Booster Cabinet - **SA** 2000mm (W)X 1650mm (H) **Includes 100mm Legs** X 800mm(D)

Twin Head Hydrant Cabinet

PART No.	DESCRIPTION
130351	Twin Head Hydrant Cabinet - **SA** 1100mm (W) X 1500mm (H) **Includes 100mm Legs** X 500mm (D)

Tank Suction Assembly Cabinet

PART No.	DESCRIPTION
130352	Tank Suction Assembly Cabinet - **SA** 1200mm (W) X 1200mm (H) **Includes 100mm Legs** X 1000mm (D)

ALL CABINETS ARE POWDER COATED RED

Fire Hose Reel Cabinet

PART No.	DESCRIPTION
130328	Double Door Fire Hose Reel Cabinet - Tall 850mm (W) x 1960mm (H) **Includes 100mm Legs** x350mm (D)
130331	Double Door Fire Hose Reel Cabinet - Tall 850mm (W) x 1960mm (H) **Includes 100mm Legs** x 400mm (D)

Cabinets Color options Fire Red, Cream, Grey or any other Color as required. P.O.A.

Fire Hose Reel Cabinets - Single Door

PART No.	DESCRIPTION
130329	Fire Hose Reel Single Door Cabinet 850mm (W) X 1065mm (H) X 350mm (D)
130330	Fire Hose Reel Single Door Cabinet 850mm (W) X 1065mm (H) X 400mm (D)

Available With OR Without Back

Cabinets Color options Fire Red, Cream, Grey or any other Color as required. P.O.A.

Fire Hose Reel Cabinet - Double Door

PART No.	DESCRIPTION
130327	Fire Hose Reel Double Door Cabinet 850mm (W) X 1065mm (H) X 350mm (D)

Available With OR Without Back

Cabinets Color options Fire Red, Cream, Grey or any other Color as required. P.O.A.

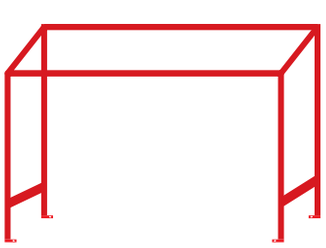

Fire Hose Reel Cabinets Stand

PART No.	DESCRIPTION
130354	Fire Hose Reel Cabinet Stand For Cabinets 130329 870mm (W) X 900mm (H) X 360mm (D)
130355	Fire Hose Reel Cabinet Stand For Cabinets 130330 870mm (W) X 900mm (H) X 410mm (D)

ALL CABINETS ARE POWDER COATED RED

Fire Australia Co Pty Ltd.
ABN No. 13165523713
47 Rushdale St. Knoxfield VIC-3180. Tel:(03) 9764 0020, Fax: (03) 9764 0023.
E-mail : sales@fireausco.com.au www.fireausco.com.au

FIRE AUSTRALIA CO

Fire Extinguisher Cabinet -Acrylic Front

PART No.	DESCRIPTION
130004	Fire Extinguisher Cabinet - Acrylic Front **PCAB-5** - **9Kg** 282mm (W) x 710mm (H) x 262mm (D) with 003 Lock
130005	Fire Extinguisher Cabinet - Acrylic Front **PCAB-6** - **4.5Kg** 282mm (W) x 552mm (H) x 202mm (D) with 003 Lock

IN CASE OF EMERGENCY
TO ACCESS FIRE
EXTINGUISHER
BREAK GLASS WITH CAUTION
INSERT HAND AND PULL DOWN
ON LEVER TO OPEN DOOR

Fire Extinguisher Cabinet - Night Latch Cabinet

PART No.	DESCRIPTION
130006	Fire Extinguisher Cabinet **PCAB-7** - **9 Kg** 282mm (W) x 762mm (H) x 262mm (D) with 003 Lock
130007	Fire Extinguisher Cabinet **PCAB-8** - **4.5 Kg** 282mm (W) x 602mm (H) x 262mm (D) with 003 Lock

IN CASE OF EMERGENCY
TO ACCESS FIRE
EXTINGUISHER
BREAK GLASS WITH CAUTION
INSERT HAND AND PULL DOWN
ON LEVER TO OPEN DOOR

PART No.	DESCRIPTION
130010	Emergency Information Cabinet **PCAB-9** 500mm (W) x 600mm (H) x 150mm (D) with 003 Lock
130011	Emergency Information Hazmat Cabinet **PCAB-9A** 500mm (W) x 600mm (H) x 150mm (D) with 003 Lock

PART No.	DESCRIPTION
130012	Emergency Information Cabinet **PCAB-10** 350mm (W) x 425mm (H) x 100mm (D) with 003 Lock
130013	Emergency Information Cabinet **PCAB-10** 350mm (W) x 425mm (H) x 150mm (D) with 003 Lock

PART No.	DESCRIPTION
130014	Essential Services Log Records Cabinet **PCAB-11** 350mm (W) x 425mm (H) x 100mm (D) with 003 Lock

ALL CABINETS ARE POWDER COATED RED

Fire Australia Co Pty Ltd.
ABN No. 13165523713
47 Rushdale St. Knoxfield VIC-3180. Tel:(03) 9764 0020, Fax: (03) 9764 0023.
E-mail : sales@fireausco.com.au www.fireausco.com.au

ESSENTIAL SERVICES LOG RECORDS

PART No.	DESCRIPTION
130015	Essential Services Log Records Cabinet **PCAB-11A** 350mm (W) x 425mm (H) x 150mm (D) with 003 Lock

EMERGENCY INFORMATION

HAZMAT

PART No.	DESCRIPTION
130016	Emergency Information Hazmat Cabinet **PCAB-12** 350mm (W) x 425mm (H) x 100mm (D) with 003 Lock

SAFETY INFORMATION

PART No.	DESCRIPTION
130017	Safety Information Cabinet **PCAB-13** 350mm (W) x 425mm (H) x 100mm (D) with 003 Lock
130018	Safety Information Cabinet **PCAB-13** 350mm (W) x 425mm (H) x 150mm (D) with 003 Lock

FIRE EQUIPMENT MAINTENANCE RECORDS

PART No.	DESCRIPTION
130023	Fire Equipment Maintenance Records Cabinet **PCAB-25** 350mm (W) X 425mm (H) X 100mm (D) with 003 Lock

ESSENTIAL SERVICES LOG RECORDS

PART No.	DESCRIPTION
130369	Essential Services Log Records White Cabinet **PCAB-11B** 350mm (W) x 425mm (H) x 100mm (D) with 003 Lock

Fire Australia Co Pty Ltd.
ABN No. 13165523713
47 Rushdale St. Knoxfield VIC-3180. Tel:(03) 9764 0020, Fax: (03) 9764 0023.
E-mail : sales@fireausco.com.au www.fireausco.com.au

FIRE AUSTRALIA CO

PART No.	DESCRIPTION
130020	Essential Services Log Book Cabinet **PCAB-22** 400mm (W) x 400mm (H) x 200mm (D) with 003 Lock

PART No.	DESCRIPTION
130021	Essential Services Log Book Cabinet **PCAB-23** 800mm (W) x 400mm (H) x 200mm (D) with 003 Lock

PART No.	DESCRIPTION
130022	Fire Safety Compliance Records Cabinet **PCAB-24** 400mm (W) x 400mm (H) x 200mm (D) with 003 Lock

Cabinet Color options Fire Red, Cream, Grey or any other Color as required. P.O.A.

T-locking Handle

PART No.	DESCRIPTION
130365	T Locking Handle

With OR Without 003 Lock options available.

Flush Type Lock

PART No.	DESCRIPTION
130370	Flush type Lock with 003 Key

With OR Without 003 Lock options available.

Cam Lock

PART No.	DESCRIPTION
130367	Cam Lock 003 Lock

Padlock With Key - 003

PART No.	DESCRIPTION
137042	003 Padlock with Key

PART No.	DESCRIPTION
130356	Sprinkler Cabinet With 50mm Outlets
130357	Sprinkler Cabinet With 65mm Outlets
130358	Sprinkler Cabinet With 80mm Outlets

Cabinet Color options Fire Red, Cream, Grey or any other Color as required. P.O.A.

Fire Australia Co Pty Ltd.
ABN No. 13165523713
47 Rushdale St. Knoxfield VIC-3180. Tel:(03) 9764 0020, Fax: (03) 9764 0023.
E-mail : sales@fireausco.com.au www.fireausco.com.au

FIRE EQUIPEMENT

- B. I. (BRITISH INSTANTANEOUS) FITTINGS 233 - 238
- BOOSTER HEAD & ACCESSORIES 191 - 193
- BRANCH PIPES, DIRECTORS & NOZZLES 239
- COUPLINGS, ADAPTORS, CAPS & PLUGS 217 - 232
- FIRE HOSE REEL & ACCESSORIES 197 - 199
- FORESTRY / QC / EXTERNAL LUG FITTINGS 240 - 242
- HEAVY DUTY SUPER CLAMPS 199
- HYDRANT VALVES & ACCESSORIES 194 - 196
- NIPPLES & ADAPTOR 200 - 202
- STANDPIPES 213 - 215
- STORZ COUPLINGS & ADAPTORS - FORGED 203 - 211
- STORZ TREE 212
- STRAINERS, CAPS & FITTINGS 243
- WORM DRIVE HOSE CLAMPS -ZINC PLATED 198
- WYES / BREECHES / DIVIDERS 216

FIRE AUSTRALIA CO

Boosters are Approved to AS 2419.3

Single Inlet Booster - Stainless Steel 80mm R/G

WaterMark

Boosters Approval : AS 2419.3

PART No	DESCRIPTION
133001	Single Inlet Booster SS 80mm R/G With Storz
133002	Single Inlet Booster SS 80mm R/G With CFA
133003	Single Inlet Booster SS 80mm R/G With MFB
133004	Single Inlet Booster SS 80mm R/G With QRT
133005	Single Inlet Booster SS 80mm R/G With NSW
133006	Single Inlet Booster SS 80mm R/G With SA
133007	Single Inlet Booster SS 80mm R/G With BI

Dual Booster Bottom Entry 100mm R/G

WaterMark

Boosters Approval : AS 2419.3

Please Note :
The standard Dual Boosters supplied by Fire Australia Co. are rated to Class 14 & Class 21, as per AS2419.3
Class 35 Boosters are also available upon request. P.O.A.

PART No	DESCRIPTION
133008	Bottom Entry Dual Booster SS 100mm R/G With Storz
133009	Bottom Entry Dual Booster SS 100mm R/G With CFA
133010	Bottom Entry Dual Booster SS 100mm R/G With MFB
133011	Bottom Entry Dual Booster SS 100mm R/G With QRT
133012	Bottom Entry Dual Booster SS 100mm R/G With NSW
133013	Bottom Entry Dual Booster SS 100mm R/G With SA
133014	Bottom Entry Dual Booster SS 100mm R/G With BI

Dual Booster Rear Entry 100mm R/G

WaterMark

Boosters Approval : AS 2419.3

Please Note :
The standard Dual Boosters supplied by Fire Australia Co. are rated to Class 14 & Class 21, as per AS2419.3
Class 35 Boosters are also available upon request. P.O.A.

PART No	DESCRIPTION
133015	Rear Entry Dual Booster SS 100mm R/G With Storz
133016	Rear Entry Dual Booster SS 100mm R/G With CFA
133017	Rear Entry Dual Booster SS 100mm R/G With MFB
133018	Rear Entry Dual Booster SS 100mm R/G With QRT
133019	Rear Entry Dual Booster SS 100mm R/G With NSW
133020	Rear Entry Dual Booster SS 100mm R/G With SA
133021	Rear Entry Dual Booster SS 100mm R/G With BI

Quad Booster Bottom Entry 150mm R/G

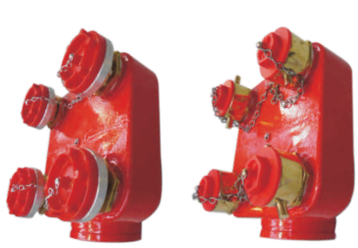

WaterMark

Boosters Approval : AS 2419.3

PART No	DESCRIPTION
133022	Bottom Entry Quad Booster SS 150mm R/G With Storz
133023	Bottom Entry Quad Booster SS 150mm R/G With CFA
133024	Bottom Entry Quad Booster SS 150mm R/G With MFB
133025	Bottom Entry Quad Booster SS 150mm R/G With QRT
133026	Bottom Entry Quad Booster SS 150mm R/G With NSW
133027	Bottom Entry Quad Booster SS 150mm R/G With SA
133028	Bottom Entry Quad Booster SS 150mm R/G With BI

Fire Australia Co Pty Ltd.
ABN No. 13165523713
47 Rushdale St. Knoxfield VIC-3180. Tel:(03) 9764 0020, Fax: (03) 9764 0023.
E-mail : sales@fireausco.com.au www.fireausco.com.au

Bush 20mm X 8mm - Galvanized

PART No	DESCRIPTION
133040	20mm x 8mm Galvanized Bush

1/4" BSP Ball Valve

PART No	DESCRIPTION
133041	8mm Mini Ball Valve Male/Female

Roll Groove Brazing Adaptors (Copper Alloy)

PART No	DESCRIPTION
208172	Roll Groove To Copper Adaptor 50mm
208173	Roll Groove To Copper Adaptor 65mm(73OD)
208174	Roll Groove To Copper Adaptor 65mm(76OD)
208175	Roll Groove To Copper Adaptor 80mm
208176	Roll Groove To Copper Adaptor 100mm
208177	Roll Groove To Copper Adaptor 125mm
208178	Roll Groove To Copper Adaptor (165)150mm
208179	Roll Groove To Copper Adaptor (168)150mm
208180	Roll Groove To Copper Adaptor (219)200mm

65mm Pressure Gauges Liquid Filled

PART No	DESCRIPTION
133038	65mm 0-2500 kPa Pressure Gauge Liquid Filled Bottom Entry with 1/4" BSP(M) Inlet
133039	65mm 0-2500 kPa Pressure Gauge Liquid Filled Rear Entry with 1/4" BSP(M) Inlet

Fire Australia Co Pty Ltd.
ABN No. 13165523713
47 Rushdale St. Knoxfield VIC-3180. Tel:(03) 9764 0020, Fax: (03) 9764 0023.
E-mail : sales@fireausco.com.au www.fireausco.com.au

63mm kPa/PSI Dual Scale1/4" BSPT Bottom Entry Liquid Filled Pressure Gauge

PART No	DESCRIPTION
133042	63mm Dual Scale Pressure Gauge 0-100 Kpa / 0-15 PSI 1/4" BSPT Bottom Entry Liquid Filled
133043	63mm Dual Scale Pressure Gauge 0-250 Kpa / 0-35 PSI 1/4" BSPT Bottom Entry Liquid Filled
133044	63mm Dual Scale Pressure Gauge 0-400 Kpa / 0-60 PSI 1/4" BSPT Bottom Entry Liquid Filled
133045	63mm Dual Scale Pressure Gauge 0-600 Kpa / 0-90 PSI 1/4" BSPT Bottom Entry Liquid Filled
133046	63mm Dual Scale Pressure Gauge 0-800 Kpa / 0-120 PSI 1/4" BSPT Bottom Entry Liquid Filled
133047	63mm Dual Scale Pressure Gauge 0-1000 Kpa / 0-150 PSI 1/4" BSPT Bottom Entry Liquid Filled
133048	63mm Dual Scale Pressure Gauge 0-1600 Kpa / 0-230 PSI 1/4" BSPT Bottom Entry Liquid Filled
133049	63mm Dual Scale Pressure Gauge 0-2500 Kpa / 0-360 PSI 1/4" BSPT Bottom Entry Liquid Filled
133050	63mm Dual Scale Pressure Gauge 0-4000 Kpa / 0-600 PSI 1/4" BSPT Bottom Entry Liquid Filled

100mm Liquid Filled Pressure Gauge 3/8" BSPT Bottom Entry

PART No	DESCRIPTION
133051	100mm Dual Scale Pressure Gauge - Liquid Filled 0-250 kPa
133052	100mm Dual Scale Pressure Gauge - Liquid Filled 0-400 kPa
133053	100mm Dual Scale Pressure Gauge - Liquid Filled 0-600 kPa
133054	100mm Dual Scale Pressure Gauge - Liquid Filled 0-800 kPa
133055	100mm Dual Scale Pressure Gauge - Liquid Filled 0-1000 kPa
133056	100mm Dual Scale Pressure Gauge - Liquid Filled 0-1600 kPa
133057	100mm Dual Scale Pressure Gauge - Liquid Filled 0-2500 kPa
133058	100mm Dual Scale Pressure Gauge - Liquid Filled 0-4000 Kpa

HYDRANT VALVES & ACCESSORIES

Hydrant Valves are Approved to AS 2419.2 & AS/NZS 4020 Standards

Approval : AS 2419.2 & AS/NZS 4020 Standards

WaterMark

Approval : AS 2419.2 & AS/NZS 4020 Standards

WaterMark

Hydrant Valve / Landing Valve / Millcock Oblique - Stainless Steel

PART No	DESCRIPTION
137001	Hydrant Valve S/Steel 80mm R/G & 65mm BSP Female inlet Oblique with Plastic Cap **CFA** Outlet
137002	Hydrant Valve S/Steel 80mm R/G & 65mm BSP Female inlet Oblique with Plastic Cap **MFB** Outlet
137004	Hydrant Valve S/Steel 80mm R/G & 65mm BSP Female inlet Oblique with Plastic Cap **Storz** Outlet with Plastic Cap **Storz Aluminium Forged adaptor is : NEN 3374 approved**
137005	Hydrant Valve S/Steel 65mm BSP Male inlet Oblique **CFA** Outlet with Plastic Cap
137006	Hydrant Valve S/Steel 65mm BSP Male inlet Oblique **MFB** Outlet with Plastic Cap
137008	Hydrant Valve S/Steel 65mm BSP Male inlet Oblique **Storz** Outlet with Plastic Cap **Storz Aluminium Forged adaptor is : NEN 3374 approved**

Approval : AS 2419.2 & AS/NZS 4020 Standards

WaterMark

Hydrant Valve / Landing Valve / Millcock Right Angled Grooved - Stainless Steel

PART No	DESCRIPTION
137009	Hydrant Valve S/Steel 80mm R/G & 65mm BSP Female inlet Right Angled with Plastic Cap **NSW FBT** Outlet
137010	Hydrant Valve S/Steel 80mm R/G & 65mm BSP Female inlet Right Angled with Plastic Cap **QRT** Outlet
137012	Hydrant Valve S/Steel 80mm R/G & 65mm BSP Female inlet Right Angled with Plastic Cap **SA** Outlet
137013	Hydrant Valve S/Steel 80mm R/G & 65mm BSP Female inlet Right Angled with Plastic Cap **Storz** Outlet **Storz Aluminium Forged adaptor is : NEN 3374 approved**
137014	Hydrant Valve S/Steel 80mm R/G & 65mm BSP Female inlet Right Angled with Plastic Plug **BI** Outlet

Fire Australia Co Pty Ltd.
ABN No. 13165523713
47 Rushdale St. Knoxfield VIC-3180. Tel:(03) 9764 0020, Fax: (03) 9764 0023.
E-mail : sales@fireausco.com.au www.fireausco.com.au

Hydrant Valves are Approved to AS 2419.2 & AS/NZS 4020 Standards

Hydrant Valve / Landing Valve / Millcock Right Angled BSP Male - Stainless Steel

Approval : AS 2419.2 & AS/NZS 4020 Standards

WaterMark

PART No	DESCRIPTION
137015	Hydrant Valve S/Steel 65mm BSP Male inlet Right Angled with Plastic Cap **NSW FBT** Outlet
137016	Hydrant Valve S/Steel 65mm BSP Male inlet Right Angled with Plastic Cap **QRT** Outlet
137018	Hydrant Valve S/Steel 65mm BSP Male inlet Right Angled with Plastic Cap **SA** Outlet with Plastic Cap
137019	Hydrant Valve S/Steel 65mm BSP Male inlet Right Angled **Storz** Outlet with Plastic Cap **Storz Aluminium Forged adaptor is : NEN 3374 approved**
137020	Hydrant Valve S/Steel 65mm BSP Male inlet Right Angled **BI** Outlet with Plastic Plug

Hydrant Valve / Landing Valve / Millcock Oblique - Copper Alloy / Brass

Approval : AS 2419.2 & AS/NZS 4020 Standards

WaterMark

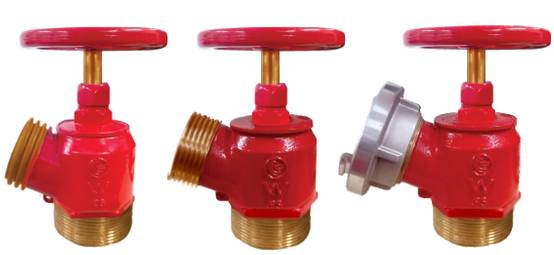

Approval : AS 2419.2 & AS/NZS 4020 Standards

WaterMark

PART No	DESCRIPTION
137021	Hydrant Valve Copper Alloy / Brass 80mm R/G & 65mm BSP Female inlet Oblique with Plastic Cap **CFA** Outlet
137022	Hydrant Valve Copper Alloy / Brass 80mm R/G & 65mm BSP Female inlet Oblique with Plastic Cap **MFB** Outlet
137024	Hydrant Valve Copper Alloy / Brass 80mm R/G & 65mm BSP Female inlet Oblique with Plastic Cap **Storz** Outlet with Plastic Cap **Storz Aluminium Forged adaptor is : NEN 3374 approved**
137025	Hydrant Valve Copper Alloy / Brass 65mm BSP Male inlet Oblique **CFA** Outlet with Plastic Cap
137026	Hydrant Valve Copper Alloy / Brass 65mm BSP Male inlet Oblique **MFB** Outlet with Plastic Cap
137028	Hydrant Valve Copper Alloy / Brass 65mm BSP Male inlet Oblique **Storz** Outlet with Plastic Cap **Storz Aluminium Forged adaptor is : NEN 3374 approved**

HYDRANT VALVES & ACCESSORIES

Hydrant Valves are Approved to AS 2419.2 & AS/NZS 4020 Standards

Hydrant Valve / Landing Valve / Millcock Right Angled - Copper Alloy / Brass

Approval : AS 2419.2 & AS/NZS 4020 Standards

WaterMark

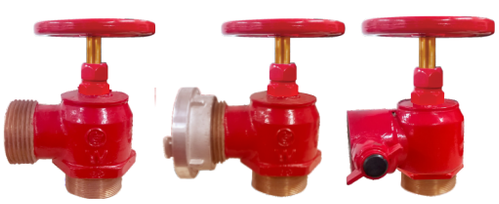

Approval : AS 2419.2 & AS/NZS 4020 Standards

WaterMark

PART No	DESCRIPTION
137029	Hydrant Valve Copper Alloy / Brass 80mm R/G & 65mm BSP Female inlet Right Angled with Plastic Cap **NSW FBT** Outlet
137030	Hydrant Valve Copper Alloy / Brass 80mm R/G & 65mm BSP Female inlet Right Angled with Plastic Cap **QRT** Outlet
137032	Hydrant Valve Copper Alloy / Brass 80mm R/G & 65mm BSP Female inlet Right Angled with Plastic Cap **SA** Outlet
137033	Hydrant Valve Copper Alloy / Brass 80mm R/G & 65mm BSP Female inlet Right Angled with Plastic Cap **Storz** Outlet **Storz Aluminium Forged adaptor is : NEN 3374 approved**
137034	Hydrant Valve Copper Alloy / Brass 80mm R/G & 65mm BSP Female inlet Right Angled with Plastic Plug **BI** Outlet
137035	Hydrant Valve Copper Alloy / Brass 65mm BSP Male inlet Right Angled with Plastic Cap **NSW** Outlet
137036	Hydrant Valve Copper Alloy / Brass 65mm BSP Male inlet Right Angled with Plastic Cap **QRT** Outlet
137038	Hydrant Valve Copper Alloy / Brass 65mm BSP Male inlet Right Angled with Plastic Cap **SA** Outlet with Plastic Cap
137039	Hydrant Valve Copper Alloy / Brass 65mm BSP Male inlet Right Angled **Storz** Outlet with Plastic Cap **Storz Aluminium Forged adaptor is : NEN 3374 approved**
137040	Hydrant Valve Copper Alloy / Brass 65mm BSP Male inlet Right Angled **BI** Outlet with Plastic Plug

Ned Kelly Valve Cover - Metallic

PART No	DESCRIPTION
137041	Valve Cover Ned Kelly Metallic

Padlock With Key - 003

PART No	DESCRIPTION
137042	003 Padlock with Key

Hydrant Wheel Valve Lock - Plastic

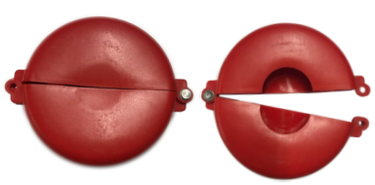

PART No	DESCRIPTION
137043	Hydrant Valve Cover Lockout Device Plastic

*LOCK NOT INCLUDED

Hydrant Wheel Valve Lock - Aluminium

New

Vandal Resistant

PART No	DESCRIPTION
137048	Hydrant Valve Cover Lockout Device Aluminium

*LOCK NOT INCLUDED

Hydrant Wheel - Aluminium (Pressure Die Cast)

PART No	DESCRIPTION
137044	Hydrant Valve Hand Wheel

Fire Australia Co Pty Ltd.
ABN No. 13165523713
47 Rushdale St. Knoxfield VIC-3180. Tel:(03) 9764 0020, Fax: (03) 9764 0023.
E-mail : sales@fireausco.com.au www.fireausco.com.au

FIRE AUSTRALIA CO

Fire Hose Reel - Approvals : AS :1221-1997

PART No.	DESCRIPTION
135000	19mm X 36m Fire Hose Reel AS 1221-1997 "Approved"
135001	19mm X 50m Fire Hose Reel
135031	19mm X 36m Swing Arm Fire Hose Reel Assembly
135032	19mm X 36m Slim Line Fire Hose Reel Assembly

Fire Hose - Approvals AS : 1221-1997

PART No.	DESCRIPTION
135002	19mm X 36m Fire Hose AS1221 "Approved"

Fire Hose Reel Cover (High Quality)

PART No.	DESCRIPTION
135016	36m Fire Hose Reel Cover - Rexine UV Stable **High Quality**
135017	50m Fire Hose Reel Cover - Rexine UV Stable **High Quality**

135024 135024 135025

Hose Reel Stands-Galvanised & Powder Coated

PART No.	DESCRIPTION
135024	Fire Hose Reel Mounting Stand With Extended Leg Mild Steel Fabricated Straight Post Galvanized and Powder Coated
135025	Fire Hose Reel Mounting Stand with Base Plate Support With Straight Post Mild Steel Fabricated Galvanized And Powder Coated

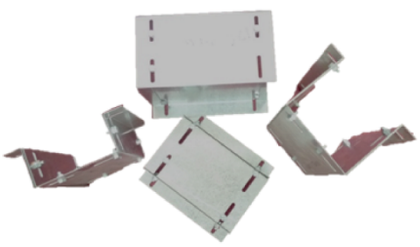

Fire Hose Reel - Adjustable Sliding Brackets

PART No.	DESCRIPTION
135027	Fire Hose Reel Adjustable Bracket 50mm-90mm
135028	Fire Hose Reel Adjustable Bracket 90mm-160mm
135029	Fire Hose Reel Adjustable Bracket 160mm-300mm
135030	Fire Hose Reel Adjustable Bracket 300mm-390mm

Fire Australia Co Pty Ltd.
ABN No. 13165523713
47 Rushdale St. Knoxfield VIC-3180. Tel:(03) 9764 0020, Fax: (03) 9764 0023.
E-mail : sales@fireausco.com.au www.fireausco.com.au

Worm Drive Hose Clamps -Zinc Plated

PART No.	DESCRIPTION					
135033	Size	000	Range	8mm	To	12mm
135034	Size	00m	Range	10mm	To	16mm
135035	Size	00	Range	12mm	To	20mm
135036	Size	25A	Range	16mm	To	25mm
135037	Size	1A	Range	20mm	To	32mm
135038	Size	1X	Range	25mm	To	40mm
135039	Size	2A	Range	32mm	To	50mm
135040	Size	2X	Range	40mm	To	60mm
135041	Size	3	Range	50mm	To	70mm
135042	Size	3X	Range	60mm	To	80mm
135043	Size	4	Range	70mm	To	90mm
135044	Size	4X	Range	90mm	To	100mm
135045	Size	110A	Range	90mm	To	110mm
135046	Size	5	Range	100mm	To	120mm
135047	Size	130A	Range	110mm	To	130mm
135048	Size	6	Range	120mm	To	140mm
135049	Size	6X	Range	130mm	To	150mm
135050	Size	160A	Range	140mm	To	160mm

Worm Drive Hose Clamps -Stainless Steel

PART No.	DESCRIPTION					
135051	Size	000	Range	8mm	To	12mm
135052	Size	00M	Range	10mm	To	16mm
135053	Size	00	Range	12mm	To	20mm
135054	Size	25A	Range	16mm	To	25mm
135055	Size	1A	Range	20mm	To	32mm
135056	Size	1X	Range	25mm	To	40mm
135057	Size	2A	Range	32mm	To	50mm
135058	Size	2X	Range	40mm	To	60mm
135059	Size	3	Range	50mm	To	70mm
135060	Size	3X	Range	60mm	To	80mm
135061	Size	4	Range	70mm	To	90mm
135062	Size	4X	Range	90mm	To	100mm
135063	Size	110A	Range	90mm	To	110mm
135064	Size	5	Range	100mm	To	120mm
135065	Size	130A	Range	110mm	To	130mm
135066	Size	6	Range	120mm	To	140mm
135067	Size	6X	Range	130mm	To	150mm
135068	Size	160A	Range	140mm	To	160mm

Fire Australia Co Pty Ltd.
ABN No. 13165523713
47 Rushdale St. Knoxfield VIC-3180. Tel:(03) 9764 0020, Fax: (03) 9764 0023.
E-mail : sales@fireausco.com.au www.fireausco.com.au

FIRE AUSTRALIA CO

Heavy Duty T Bolt Super Clamps Type W1 - All Parts Galvanised Mild Steel

PART No.	DESCRIPTION
135068	17-19mm Ø Type W1 Heavy Duty T Bolt Super Clamps
135069	19-21mm Ø Type W1 Heavy Duty T Bolt Super Clamps
135070	21-23mm Ø Type W1 Heavy Duty T Bolt Super Clamps
135071	23-25mm Ø Type W1 Heavy Duty T Bolt Super Clamps
135072	25-27mm Ø Type W1 Heavy Duty T Bolt Super Clamps
135073	27-29mm Ø Type W1 Heavy Duty T Bolt Super Clamps
135074	29-31mm Ø Type W1 Heavy Duty T Bolt Super Clamps
135075	31-34mm Ø Type W1 Heavy Duty T Bolt Super Clamps
135076	34-37mm Ø Type W1 Heavy Duty T Bolt Super Clamps
135077	37-40mm Ø Type W1 Heavy Duty T Bolt Super Clamps
135078	40-43mm Ø Type W1 Heavy Duty T Bolt Super Clamps
135079	43-47mm Ø Type W1 Heavy Duty T Bolt Super Clamps
135080	47-51mm Ø Type W1 Heavy Duty T Bolt Super Clamps
135081	51-55mm Ø Type W1 Heavy Duty T Bolt Super Clamps
135082	55-59mm Ø Type W1 Heavy Duty T Bolt Super Clamps
135083	59-63mm Ø Type W1 Heavy Duty T Bolt Super Clamps
135084	63-68mm Ø Type W1 Heavy Duty T Bolt Super Clamps
135085	68-73mm Ø Type W1 Heavy Duty T Bolt Super Clamps
135086	73-79mm Ø Type W1 Heavy Duty T Bolt Super Clamps
135087	79-85mm Ø Type W1 Heavy Duty T Bolt Super Clamps
135088	85-91mm Ø Type W1 Heavy Duty T Bolt Super Clamps
135089	91-97mm Ø Type W1 Heavy Duty T Bolt Super Clamps
135090	97-104mm Ø Type W1 Heavy Duty T Bolt Super Clamps
135091	104-112mm Ø Type W1 Heavy Duty T Bolt Super Clamps
135092	112-121mm Ø Type W1 Heavy Duty T Bolt Super Clamps
135093	121-130mm Ø Type W1 Heavy Duty T Bolt Super Clamps
135094	130-140mm Ø Type W1 Heavy Duty T Bolt Super Clamps
135095	140-150mm Ø Type W1 Heavy Duty T Bolt Super Clamps
135096	150-162mm Ø Type W1 Heavy Duty T Bolt Super Clamps
135097	162-174mm Ø Type W1 Heavy Duty T Bolt Super Clamps
135098	174-187mm Ø Type W1 Heavy Duty T Bolt Super Clamps
135099	187-200mm Ø Type W1 Heavy Duty T Bolt Super Clamps
135100	200-213mm Ø Type W1 Heavy Duty T Bolt Super Clamps
135101	213-226mm Ø Type W1 Heavy Duty T Bolt Super Clamps
135102	226-239mm Ø Type W1 Heavy Duty T Bolt Super Clamps
135103	239-252mm Ø Type W1 Heavy Duty T Bolt Super Clamps

Heavy Duty T Bolt Super Clamps Type W2 Band and Housing - Stainless Steel AISI 430, Bolt - Galvanised

PART No.	DESCRIPTION
135104	17-19mm Ø Type W2 Heavy Duty T Bolt Super Clamps
135105	19-21mm Ø Type W2 Heavy Duty T Bolt Super Clamps
135106	21-23mm Ø Type W2 Heavy Duty T Bolt Super Clamps
135107	23-25mm Ø 'type W2 Heavy Duty T Bolt Super Clamps
135108	25-27mm Ø 'type W2 Heavy Duty T Bolt Super Clamps
135109	27-29mm Ø 'type W2 Heavy Duty T Bolt Super Clamps
135110	29-31mm Ø 'type W2 Heavy Duty T Bolt Super Clamps
135111	31-34mm Ø 'type W2 Heavy Duty T Bolt Super Clamps
135112	34-37mm Ø 'type W2 Heavy Duty T Bolt Super Clamps
135113	37-40mm Ø Type W2 Heavy Duty T Bolt Super Clamps
135114	40-43mm Ø Type W2 Heavy Duty T Bolt Super Clamps
135115	43-47mm Ø Type W2 Heavy Duty T Bolt Super Clamps
135116	47-51mm Ø Type W2 Heavy Duty T Bolt Super Clamps
135117	51-55mm Ø Type W2 Heavy Duty T Bolt Super Clamps
135118	55-59mm Ø Type W2 Heavy Duty T Bolt Super Clamps
135119	59-63mm Ø Type W2 Heavy Duty T Bolt Super Clamps
135120	63-68mm Ø Type W2 Heavy Duty T Bolt Super Clamps
135121	68-73mm Ø Type W2 Heavy Duty T Bolt Super Clamps
135122	73-79mm Ø Type W2 Heavy Duty T Bolt Super Clamps
135123	79-85mm Ø Type W2 Heavy Duty T Bolt Super Clamps
135124	85-91mm Ø Type W2 Heavy Duty T Bolt Super Clamps
135125	91-97mm Ø Type W2 Heavy Duty T Bolt Super Clamps
135126	97-104mm Ø Type W2 Heavy Duty T Bolt Super Clamps
135127	104-112mm Ø Type W2 Heavy Duty T Bolt Super Clamps
135128	112-121mm Ø Type W2 Heavy Duty T Bolt Super Clamps
135129	121-130mm Ø Type W2 Heavy Duty T Bolt Super Clamps
135130	130-140mm Ø Type W2 Heavy Duty T Bolt Super Clamps
135131	140-150mm Ø Type W2 Heavy Duty T Bolt Super Clamps
135132	150-162mm Ø Type W2 Heavy Duty T Bolt Super Clamps
135133	162-174mm Ø Type W2 Heavy Duty T Bolt Super Clamps
135134	174-187mm Ø Type W2 Heavy Duty T Bolt Super Clamps
135135	187-200mm Ø Type W2 Heavy Duty T Bolt Super Clamps
135136	200-213mm Ø Type W2 Heavy Duty T Bolt Super Clamps
135137	213-226mm Ø Type W2 Heavy Duty T Bolt Super Clamps
135138	226-239mm Ø Type W2 Heavy Duty T Bolt Super Clamps
135139	239-252mm Ø Type W2 Heavy Duty T Bolt Super Clamps

Nipple Round Thread X BSP - Aluminium

PART No	DESCRIPTION
132009	5″ Round Threads X 4″ BSP Male Nipple
132010	5″ Round Threads X 5″ BSP Male Nipple
132011	6″ Round Threads X 5″ BSP Male Nipple
132012	6″ Round Threads X 6″ BSP Male Nipple

Straight Nipples BSP - Aluminium

PART No	DESCRIPTION
132013	1" BSP Male Straight Aluminium Nipple
132014	1" BSP Male Straight Brass Nipple
132015	1.5" BSP Male Straight Aluminium Nipple
132016	1.5" BSP Male Straight Brass Nipple
132017	2" BSP Male Straight Aluminium Nipple
132018	2" BSP Male Straight Brass Nipple
132019	2.5" BSP Male Straight Aluminium Nipple
132020	2.5" BSP Male Straight Brass Nipple
132021	3" BSP Male Straight Aluminium Nipple
132022	3" BSP Male Straight Brass Nipple
132023	4" BSP Male Straight Aluminium Nipple
132024	4" BSP Male Straight Brass Nipple
132025	5" BSP Male Straight Aluminium Nipple
132026	5" BSP Male Straight Brass Nipple
132027	6" BSP Male Straight Aluminium Nipple
132028	6" BSP Male Straight Brass Nipple

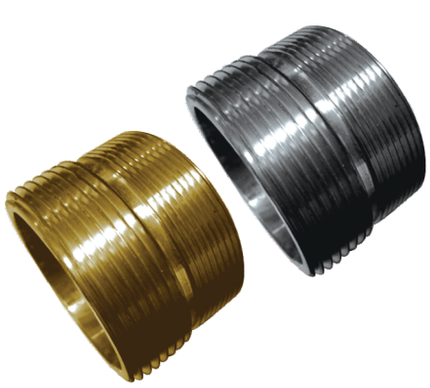

Nipples Male To Male - NH

PART No	DESCRIPTION
132029	1" BSP Male X 1" NH Male Nipple-Aluminium
132030	1" BSP Male X 1" NH Male Nipple-Brass
132031	1.5" BSP Male X 1.5" NH Male Nipple-Aluminium
132032	1.5" BSP Male X 1.5" NH Male Nipple-Brass
132033	2" BSP Male X 2" NH Male Nipple-Aluminium
132034	2" BSP Male X 2" NH Male Nipple-Brass
132035	2.5" BSP Male X 2.5" NH Male Nipple-Aluminium
132036	2.5" BSP Male X 2.5" NH Male Nipple-Brass

Fire Australia Co Pty Ltd.
ABN No. 13165523713
47 Rushdale St. Knoxfield VIC-3180. Tel:(03) 9764 0020, Fax: (03) 9764 0023.
E-mail : sales@fireausco.com.au www.fireausco.com.au

FIRE AUSTRALIA CO

Aluminium BSP Nipple Reducing

PART No.	DESCRIPTION
132037	1″ BSP Male X 1/2″ BSP Male Reducing Nipple-Aluminium
132038	1″ BSP Male X 1/2″ BSP Male Reducing Nipple-Brass
132039	1″ BSP Male X 3/4″ BSP Male Reducing Nipple-Aluminium
132040	1″ BSP Male X 3/4″ BSP Male Reducing Nipple-Brass
132041	1.25″ BSP Male X 1″ BSP Male Reducing Nipple-Aluminium
132042	1.25″ BSP Male X 1″ BSP Male Reducing Nipple-Brass
132043	1.5″ BSP Male X 1″ BSP Male Reducing Nipple-Aluminium
132044	1.5″ BSP Male X 1″ BSP Male Reducing Nipple-Brass
132045	2″ BSP Male X 1″ BSP Male Reducing Nipple-Aluminium
132046	2″ BSP Male X 1″ BSP Male Reducing Nipple-Brass
132047	2″ BSP Male X 1.5″ BSP Male Reducing Nipple-Aluminium
132048	2″ BSP Male X 1.5″ BSP Male Reducing Nipple-Brass
132049	2.5″ BSP Male X 1″ BSP Male Reducing Nipple-Aluminium
132050	2.5″ BSP Male X 1″ BSP Male Reducing Nipple-Brass
132051	2.5″ BSP Male X 1.5″ BSP Male Reducing Nipple-Aluminium
132052	2.5″ BSP Male X 1.5″ BSP Male Reducing Nipple-Brass
132053	2.5″ BSP Male X 2″ BSP Male Reducing Nipple-Aluminium
132054	2.5″ BSP Male X 2″ BSP Male Reducing Nipple-Brass
132055	3″ BSP Male X 2.5″ BSP Male Reducing Nipple-Aluminium
132056	3″ BSP Male X 2.5″ BSP Male Reducing Nipple-Brass
132057	4″ BSP Male X 2.5″ BSP Male Reducing Nipple-Aluminium
132058	4″ BSP Male X 2.5″ BSP Male Reducing Nipple-Brass
132059	4″ BSP Male X 3″ BSP Male Reducing Nipple-Aluminium
132060	4″ BSP Male X 3″ BSP Male Reducing Nipple-Brass
132061	5″ BSP Male X 2.5″ BSP Male Reducing Nipple-Aluminium
132062	5″ BSP Male X 2.5″ BSP Male Reducing Nipple-Brass
132063	5″ BSP Male X 3″ BSP Male Reducing Nipple-Aluminium
132064	5″ BSP Male X 3″ BSP Male Reducing Nipple-Brass
132065	5″ BSP Male X 4″ BSP Male Reducing Nipple-Aluminium
132066	5″ BSP Male X 4″ BSP Male Reducing Nipple-Brass
132067	6″ BSP Male X 3″ BSP Male Reducing Nipple-Aluminium
132068	6″ BSP Male X 3″ BSP Male Reducing Nipple-Brass
132069	6″ BSP Male X 4″ BSP Male Reducing Nipple-Aluminium
132070	6″ BSP Male X 4″ BSP Male Reducing Nipple-Brass
132071	6″ BSP Male X 5″ BSP Male Reducing Nipple-Aluminium
132072	6″ BSP Male X 5″ BSP Male Reducing Nipple-Brass

Fire Australia Co Pty Ltd.
ABN No. 13165523713
47 Rushdale St. Knoxfield VIC-3180. Tel:(03) 9764 0020, Fax: (03) 9764 0023.
E-mail : sales@fireausco.com.au www.fireausco.com.au

Adaptor Female To Male

PART No.	DESCRIPTION
132073	1" NH Female X 1" BSP Male Nipple-Aluminium
132074	1" NH Female X 1" BSP Male Nipple-Brass
132075	1.5" NH Female X 1.5" BSP Male Nipple-Aluminium
132076	1.5" NH Female X 1.5" BSP Male Nipple-Brass
132077	2.5" NH Female X 2.5" BSP Male Nipple-Aluminium
132078	2.5" NH Female X 2.5" BSP Male Nipple-Brass
132079	1.5" BSP Female X 2.5" BSP Male Nipple-Aluminium
132080	1.5" BSP Female X 2.5" BSP Male Nipple-Brass
132081	2" BSP Female X 1" BSP Male Nipple-Aluminium
132082	2" BSP Female X 1" BSP Male Nipple-Brass
132083	2" BSP Female X 1.25" BSP Male Nipple-Aluminium
132084	2" BSP Female X 1.25" BSP Male Nipple-Brass
132085	2" BSP Female X 1.5" BSP Male Nipple-Aluminium
132086	2" BSP Female X 1.5" BSP Male Nipple-Brass
132087	2" BSP Female X 2.5" BSP Male Nipple-Aluminium
132088	2" BSP Female X 2.5" BSP Male Nipple-Brass
132089	2.5" BSP Female X 1" BSP Male Nipple-Aluminium
132090	2.5" BSP Female X 1" BSP Male Nipple-Brass
132091	2.5" BSP Female X 1.5" BSP Male Nipple-Aluminium
132092	2.5" BSP Female X 1.5" BSP Male Nipple-Brass
132093	2.5" BSP Female X 2" BSP Male Nipple-Aluminium
132094	2.5" BSP Female X 2" BSP Male Nipple-Brass
132095	3" BSP Female X 1.5" BSP Male Nipple-Aluminium
132096	3" BSP Female X 1.5" BSP Male Nipple-Brass
132097	3" BSP Female X 2" BSP Male Nipple-Aluminium
132098	3" BSP Female X 2" BSP Male Nipple-Brass
132099	3" BSP Female X 2.5" BSP Male Nipple-Aluminium
132100	3" BSP Female X 2.5" BSP Male Nipple-Brass
132101	4" BSP Female X 2" BSP Male Nipple-Aluminium
132102	4" BSP Female X 2" BSP Male Nipple-Brass
132103	4" BSP Female X 2.5" BSP Male Nipple-Aluminium
132104	4" BSP Female X 2.5" BSP Male Nipple-Brass
132105	4" BSP Female X 3" BSP Male Nipple-Aluminium
132106	4" BSP Female X 3" BSP Male Nipple-Brass

Nipples Fire Brigade Threads To Male BSP

PART No.	DESCRIPTION
132107	CFA Male X 2.5" BSP Male Nipples-Aluminium
132108	CFA Male X 2.5" BSP Male Nipples-Brass
132109	MFB Male X 2.5" BSP Male Nipples-Aluminium
132110	MFB Male X 2.5" BSP Male Nipples-Brass
132111	NSW Male X 2.5" BSP Male Nipples-Aluminium
132112	NSW Male X 2.5" BSP Male Nipples-Brass
132113	QRT Male X 2.5" BSP Male Nipples-Aluminium
132114	QRT Male X 2.5" BSP Male Nipples-Brass
132115	SA Male X 2.5" BSP Male Nipples-Aluminium
132116	SA Male X 2.5" BSP Male Nipples-Brass

Fire Australia Co Pty Ltd.
ABN No. 13165523713
47 Rushdale St. Knoxfield VIC-3180. Tel:(03) 9764 0020, Fax: (03) 9764 0023.
E-mail : sales@fireausco.com.au www.fireausco.com.au

STORZ COUPLINGS & ADAPTORS - FORGED

FIRE AUSTRALIA CO

Approvals : NEN 3374 & DIN

Storz Hose Tail Coupling - Forged Aluminium

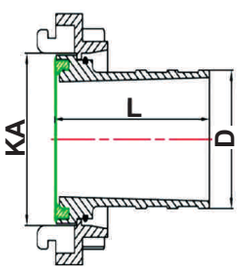

PART No.	DESCRIPTION	STD	KA	D	L
128001	Storz 25 X 12mm Tail Coupling -Forged Aluminium		31	12	60
128002	Storz 25 X 19mm Tail Coupling -Forged Aluminium		31	19	60
128003	Storz 25 X 25mm Tail Coupling -Forged Aluminium	**DIN 14301**	31	25	60
128005	Storz 38 X 19mm Tail Coupling -Forged Aluminium		52	19	90
128006	Storz 38 X 25mm Tail Coupling -Forged Aluminium		52	25	90
128007	Storz 38 X 32mm Tail Coupling -Forged Aluminium		52	32	90
128008	Storz 38 X 38mm Tail Coupling -Forged Aluminium		52	38	90
128010	Storz 52 X 25mm Tail Coupling -Forged Aluminium		66	25	90
128012	Storz 52 X 38mm Tail Coupling -Forged Aluminium		66	38	90
128014	Storz 52 X 52mm Tail Coupling -Forged Aluminium	**DIN 14321**	66	52	90
128016	Storz 65 X 38mm Tail Coupling -Forged Aluminium	**NEN 3374**	81	38	100
128018	Storz 65 X 52mm Tail Coupling -Forged Aluminium	**NEN 3374**	81	52	100
128020	Storz 65 X 65mm Tail Coupling -Forged Aluminium	**NEN 3374**	81	65	100
128022	Storz 65 X 70mm Tail Coupling -Forged Aluminium	**NEN 3374**	81	70	100
128024	Storz 75 X 65mm Tail Coupling -Forged Aluminium		89	65	125
128028	Storz 75 X 75mm Tail Coupling -Forged Aluminium	**DIN 14322**	89	75	125
128030	Storz 90 X 90mm Tail Coupling -Forged Aluminium		105	90	150
128032	Storz 100X100mm Tail Coupling -Forged Aluminium		115	100	150
128034	Storz 125X125mm Tail Coupling-Forged Aluminium		148	125	200
128036	Storz 150X150mm Tail Coupling-Forged Aluminium		160	150	180

Storz Female Adaptor - Forged Aluminium

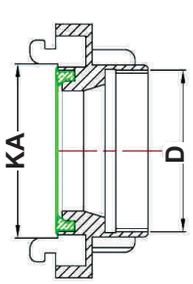

PART No.	DESCRIPTION	STD	KA	D
128038	Storz 25 X 19mm BSP Female Adaptor -Forged Aluminium		31	19 BSP
128040	Storz 25 X 25mm NH Female Adaptor -Forged Aluminium		31	25 NH
128042	Storz 25 X 25mm NPSH Female Adaptor -Forged Aluminium		31	25 NPSH
128044	Storz 25 X 25mm BSP Female Adaptor -Forged Aluminium	**DIN 14306**	31	25 BSP
128048	Storz 38 X 38mm NH Female Adaptor -Forged Aluminium		52	38 NH
128050	Storz 38 X 38mm NPSH Female Adaptor -Forged Aluminium		52	38 NPSH
128054	Storz 38 X 38mm BSP Female Adaptor -Forged Aluminium		52	38 BSP
128058	Storz 52 X 38mm NH Female Adaptor -Forged Aluminium		66	38 NH
128060	Storz 52 X 52mm NH Female Adaptor -Forged Aluminium		66	52 NH
128064	Storz 52 X 38mm BSP Female Adaptor -Forged Aluminium		66	38 BSP
128066	Storz 52 X 52mm BSP Female Adaptor -Forged Aluminium	**DIN 14306**	66	52 BSP

Fire Australia Co Pty Ltd.
ABN No. 13165523713
47 Rushdale St. Knoxfield VIC-3180. Tel:(03) 9764 0020, Fax: (03) 9764 0023.
E-mail : sales@fireausco.com.au www.fireausco.com.au

Approvals : NEN 3374 & DIN

Storz Female Adaptor - Forged Aluminium

PART No.	DESCRIPTION	STD	KA	D
128070	Storz 65 X 38mm NH Female Adaptor -Forged Aluminium	NEN 3374	81	38 NH
128072	Storz 65 X 38mm BSP Female Adaptor -Forged Aluminium	NEN 3374	81	38 BSP
128076	Storz 65 X 52mm NH Female Adaptor -Forged Aluminium	NEN 3374	81	52 NH
128078	Storz 65 X 52mm BSP Female Adaptor -Forged Aluminium	NEN 3374	81	52 BSP
128082	Storz 65 X 65mm NH Female Adaptor -Forged Aluminium	NEN 3374	81	65 NH
128084	Storz 65 X 65mm BSP Female Adaptor -Forged Aluminium	NEN 3374	81	65 BSP
128086	Storz 65 X 75mm BSP Female Adaptor -Forged Aluminium	NEN 3374	81	75 BSP
128090	Storz 65 X CFA Female Adaptor -Forged Aluminium	NEN 3374	81	CFA
128092	Storz 65 X MFB Female Adaptor -Forged Aluminium	NEN 3374	81	MFB
128094	Storz 65 X NSW Female Adaptor -Forged Aluminium	NEN 3374	81	NSW
128096	Storz 65 X QRT Female Adaptor -Forged Aluminium	NEN 3374	81	QRT
128098	Storz 65 X SA Female Adaptor -Forged Aluminium	NEN 3374	81	SA
128100	Storz 65 X BI Female Adaptor -Forged Aluminium	NEN 3374	81	BI
128102	Storz 75 X 52mm BSP Female Adaptor -Forged Aluminium		89	52 BSP
128106	Storz 75 X 65mm BSP Female Adaptor -Forged Aluminium	DIN 14308	89	65 BSP
128110	Storz 75 X 75mm BSP Female Adaptor -Forged Aluminium		89	75 BSP
128111	Storz 90 X 65mm BSP Female Adaptor -Forged Aluminium		105	65 BSP
128115	Storz 90 X 75mm BSP Female Adaptor -Forged Aluminium		105	75 BSP
128119	Storz 100X65mm BSP Female Adaptor -Forged Aluminium		115	65 BSP
128123	Storz 100X75mm BSP Female Adaptor -Forged Aluminium		115	75 BSP
128127	Storz 100X100mm BSP Female Adaptor -Forged Aluminium		15	100BSP
128129	Storz 125X65mm BSP Female Adaptor -Forged Aluminium		148	65 BSP
128133	Storz 125X75mm BSP Female Adaptor -Forged Aluminium		148	75 BSP
128137	Storz 125X90mm BSP Female Adaptor -Forged Aluminium		148	90 BSP
128141	Storz 125X100mm BSP Female Adaptor -Forged Aluminium		148	100BSP
128145	Storz 125X125mm BSP Female Adaptor -Forged Aluminium		148	125BSP
128147	Storz 150X100mm BSP Female Adaptor -Forged Aluminium		160	100BSP
128151	Storz 150X125mm BSP Female Adaptor -Forged Aluminium		160	125BSP
128155	Storz 150X150mm BSP Female Adaptor -Forged Aluminium		160	150BSP
128157	Storz 25 X 19mm BSP Male Adaptor -Forged Aluminium		31	19 BSP
128161	Storz 25 X 25mm NH Male Adaptor` -Forged Aluminium		31	25 NH
128165	Storz 25 X 25mm NPSH Male Adaptor -Forged Aluminium		31	25NPSH
128169	Storz 25 X 25mm BSP Male Adaptor -Forged Aluminium		31	25 BSP

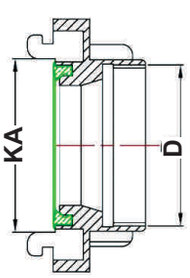

Fire Australia Co Pty Ltd.
ABN No. 13165523713
47 Rushdale St. Knoxfield VIC-3180. Tel:(03) 9764 0020, Fax: (03) 9764 0023.
E-mail : sales@fireausco.com.au www.fireausco.com.au

FIRE AUSTRALIA CO

Approvals : NEN 3374 & DIN

Storz Male Adaptor - Forged Aluminium

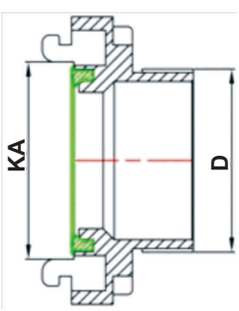

PART No.	DESCRIPTION	STD	KA	D
128173	Storz 38 X 38mm NH Male Adaptor -Forged Aluminium		52	38 BSP
128177	Storz 38X38mm NPSH Male Adaptor -Forged Aluminium		52	38NPSH
128185	Storz 38 X 38mm BSP Male Adaptor -Forged Aluminium		52	38 BSP
128189	Storz 52 X 38mm NH Male Adaptor -Forged Aluminium		66	38 NH
128191	Storz 52 X 52mm NH Male Adaptor -Forged Aluminium		66	52 NH
128195	Storz 52 X 38mm BSP Male Adaptor -Forged Aluminium		66	38 BSP
128199	Storz 52 X 52mm BSP Male Adaptor -Forged Aluminium		66	52 BSP
128205	Storz 65 X 38mm NH Male Adaptor -Forged Aluminium	**NEN 3374**	81	38 NH
128207	Storz 65 X 38mm BSP Male Adaptor -Forged Aluminium	**NEN 3374**	81	38 BSP
128211	Storz 65 X 52mm NH Male Adaptor -Forged Aluminium	**NEN 3374**	81	52 NH
128213	Storz 65 X 52mm BSP Male Adaptor -Forged Aluminium	**NEN 3374**	81	52 BSP
128217	Storz 65 X 65mm NH Male Adaptor -Forged Aluminium	**NEN 3374**	81	65 NH
128219	Storz 65 X 65mm BSP Male Adaptor -Forged Aluminium	**NEN 3374**	81	65 BSP
128223	Storz 65 X 75mm BSP Male Adaptor -Forged Aluminium	**NEN 3374**	81	75 BSP
128227	Storz 65 X CFA Male Adaptor -Forged Aluminium	**NEN 3374**	81	CFA
128231	Storz 65 X MFB Male Adaptor -Forged Aluminium	**NEN 3374**	81	MFB
128235	Storz 65 X NSW Male Adaptor -Forged Aluminium	**NEN 3374**	81	NSW
128239	Storz 65 X QRT Male Adaptor -Forged Aluminium	**NEN 3374**	81	QRT
128243	Storz 65 X SA Male Adaptor -Forged Aluminium	**NEN 3374**	81	SA
128247	Storz 65 X BI Male Adaptor -Forged Aluminium	**NEN 3374**	81	BI
128248	Storz 75 X 52mm BSP Male Adaptor -Forged Aluminium		89	52 BSP
128252	Storz 75 X 65mm BSP Male Adaptor -Forged Aluminium		89	65 BSP
128256	Storz 75 X 75mm BSP Male Adaptor -Forged Aluminium		89	75 BSP
128260	Storz 90 X 65mm BSP Male Adaptor -Forged Aluminium		105	65 BSP
128264	Storz 90 X 75mm BSP Male Adaptor -Forged Aluminium		105	75 BSP
128268	Storz 100 X 65mm BSP Male Adaptor -Forged Aluminium		115	65 BSP
128272	Storz 100 X 75mm BSP Male Adaptor -Forged Aluminium		115	75 BSP
128276	Storz 100 X 100mm BSP Male Adaptor -Forged Aluminium		115	100BSP
128280	Storz 125 X 65mm BSP Male Adaptor -Forged Aluminium		148	65 BSP
128284	Storz 125 X 75mm BSP Male Adaptor -Forged Aluminium		148	75 BSP
128288	Storz 125 X 90mm BSP Male Adaptor -Forged Aluminium		148	90 BSP
128292	Storz 125 X 100mm BSP Male Adaptor -Forged Aluminium		148	100BSP
128296	Storz 125 X 125mm BSP Male Adaptor -Forged Aluminium		148	125BSP
128300	Storz 150 X 150mm BSP Male Adaptor -Forged Aluminium		160	150BSP

Fire Australia Co Pty Ltd.
ABN No. 13165523713
47 Rushdale St. Knoxfield VIC-3180. Tel:(03) 9764 0020, Fax: (03) 9764 0023.
E-mail : sales@fireausco.com.au www.fireausco.com.au

Approvals : NEN 3374 & DIN

Storz Reducer - Forged Aluminium

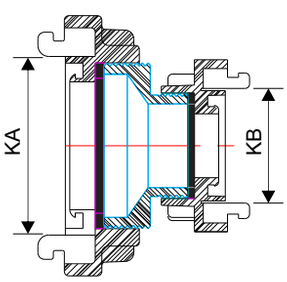

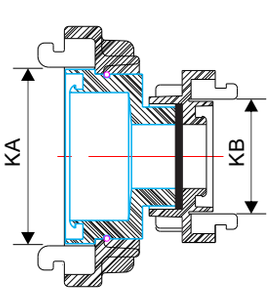

PART No.	DESCRIPTION	STD	KA	D
128308	Storz 38 X Storz 25 Fixed Reducer -Forged Aluminium		52	31
128310	Storz 38 X Storz 25 Swivel Reducer -Forged Aluminium		52	31
128312	Storz 52 X Storz 25 Fixed Reducer -Forged Aluminium		66	31
128314	Storz 52 X Storz 25 Swivel Reducer -Forged Aluminium	**DIN 14341**	66	31
128316	Storz 52 X Storz 38 Fixed Reducer -Forged Aluminium		66	52
128318	Storz 52 X Storz 38 Swivel Reducer -Forged Aluminium		66	52
128320	Storz 65 X Storz 25 Fixed Reducer -Forged Aluminium	**NEN 3374**	81	31
128322	Storz 65 X Storz 25 Swivel Reducer -Forged Aluminium	**NEN 3374**	81	31
128324	Storz 65 X Storz 38 Fixed Reducer -Forged Aluminium	**NEN 3374**	81	52
128326	Storz 65 X Storz 38 Swivel Reducer -Forged Aluminium	**NEN 3374**	81	52
128328	Storz 65 X Storz 52 Fixed Reducer -Forged Aluminium	**NEN 3374**	81	66
128330	Storz 65 X Storz 52 Swivel Reducer -Forged Aluminium	**NEN 3374**	81	66
128332	Storz 75 X Storz 52 Fixed Reducer -Forged Aluminium		89	66
128334	Storz 75 X Storz 52 Swivel Reducer -Forged Aluminium	**DIN 14342**	89	66
128336	Storz 75 X Storz 65 Fixed Reducer -Forged Aluminium		89	81
128338	Storz 75 X Storz 65 Swivel Reducer -Forged Aluminium		89	81
128340	Storz 90 X Storz 65 Fixed Reducer -Forged Aluminium		105	81
128342	Storz 90 X Storz 65 Swivel Reducer -Forged Aluminium		105	81
128344	Storz 90 X Storz 75 Fixed Reducer -Forged Aluminium		105	89
128346	Storz 90 X Storz 75 Swivel Reducer -Forged Aluminium		105	89
128348	Storz 100 X Storz 75 Fixed Reducer -Forged Aluminium		115	89
128349	Storz 100 X Storz 75 Swivel Reducer -Forged Aluminium	**DIN 14343**	115	89
128350	Storz 100 X Storz 90 Fixed Reducer -Forged Aluminium		115	105
128351	Storz 100 X Storz 90 Swivel Reducer -Forged Aluminium		115	105
128352	Storz 125 X Storz 90 Fixed Reducer -Forged Aluminium		148	105
128354	Storz 125 X Storz 90 Swivel Reducer -Forged Aluminium		148	105
128356	Storz 125 X Storz 100 Fixed Reducer -Forged Aluminium		148	115
128358	Storz 125 X Storz 100 Swivel Reducer -Forged Aluminium		148	115
128360	Storz 150 X Storz 100 Fixed Reducer -Forged Aluminium		160	115
128362	Storz 150 X Storz 100 Swivel Reducer -Forged Aluminium		160	115
128364	Storz 150 X Storz 125 Fixed Reducer -Forged Aluminium		160	148
128366	Storz 150 X Storz 125 Swivel Reducer -Forged Aluminium		160	148

Fire Australia Co Pty Ltd.
ABN No. 13165523713
47 Rushdale St. Knoxfield VIC-3180. Tel:(03) 9764 0020, Fax: (03) 9764 0023.
E-mail : sales@fireausco.com.au www.fireausco.com.au

FIRE AUSTRALIA CO

Approvals : NEN 3374 & DIN

Storz Cap - Forged Aluminium

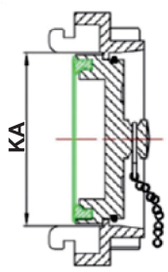

PART No.	DESCRIPTION	STD	KA
128368	Storz Cap 25mm - Forged Aluminium	**DIN 14310**	31
128370	Storz Cap 38mm - Forged Aluminium		52
128372	Storz Cap 52mm - Forged Aluminium	**DIN 14311**	66
128374	Storz Cap 65mm - Forged Aluminium	**NEN 3374**	81
128377	Storz Cap 75mm - Forged Aluminium	**DIN 14312**	89
128379	Storz Cap 90mm - Forged Aluminium		105
128381	Storz Cap 100mm - Forged Aluminium	**DIN 14313**	115
128383	Storz Cap 125mm - Forged Aluminium		148
128385	Storz Cap 150mm - Forged Aluminium		160

Storz Cap - Plastic

PART No.	DESCRIPTION
128376	Storz Cap 65mm Plastic

Storz Spanner

PART No.	DESCRIPTION
140009	Storz Spanner Up To 65mm
140010	Storz Spanner Up To 75mm
140011	Storz Spanner Up To 150mm

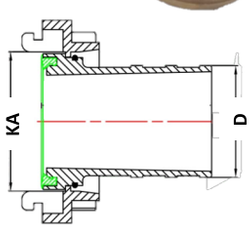

Storz Hose Tail Coupling - Forged Brass

PART No.	DESCRIPTION	KA	D
128004	Storz 25 X 25mm Tail Coupling-Brass	31	25
128389	Storz 38 X 25mm Tail Coupling-Brass	52	25
128009	Storz 38 X 38mm Tail Coupling-Brass	52	38
128011	Storz 52 X 25mm Tail Coupling-Brass	66	25
128013	Storz 52 X 38mm Tail Coupling-Brass	66	38
128015	Storz 52 X 52mm Tail Coupling-Brass	66	52
128017	Storz 65 X 38mm Tail Coupling-Brass	81	38
128019	Storz 65 X 52mm Tail Coupling-Brass	81	52
128021	Storz 65 X 65mm Tail Coupling-Brass	81	65
128025	Storz 75 X 65mm Tail Coupling-Brass	89	65
128029	Storz 75 X 75mm Tail Coupling-Brass	89	75
128033	Storz 100 X 100mm Tail Coupling-Brass	115	100
128035	Storz 125 X 125mm Tail Coupling-Brass	148	125

Fire Australia Co Pty Ltd.
ABN No. 13165523713
47 Rushdale St. Knoxfield VIC-3180. Tel:(03) 9764 0020, Fax: (03) 9764 0023.
E-mail : sales@fireausco.com.au www.fireausco.com.au

FIRE AUSTRALIA CO

Storz Female Adaptor - Forged Brass

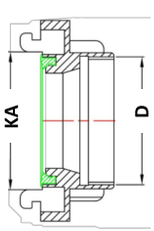

PART No.	DESCRIPTION	KA	D
128039	Storz 25 X 19mm BSPFemale Adaptor-Brass	31	19 BSP
128041	Storz 25 X 25mm NH Female Adaptor-Brass	31	25 NH
128043	Storz 25 X 25mm NPSH Female Adaptor-Brass	31	25NPSH
128045	Storz 25 X 25mm BSPFemale Adaptor-Brass	31	25 BSP
128049	Storz 38 X 38mm NH Female Adaptor-Brass	52	38 NH
128051	Storz 38 X 38mm NPSH Female Adaptor-Brass	52	25NPSH
128055	Storz 38 X 38mm BSP Female Adaptor-Brass	52	38 BSP
128059	Storz 52 X 38mm NH Female Adaptor-Brass	66	38 NH
128061	Storz 52 X 52mm NH Female Adaptor-Brass	66	52 NH
128065	Storz 52 X 38mm BSP Female Adaptor-Brass	66	38 BSP
128067	Storz 52 X 52mm BSPFemale Adaptor-Brass	66	52 BSP
128071	Storz 65 X 38mm NHFemale Adaptor-Brass	81	38 NH
128073	Storz 65 X 38mm BSP Female Adaptor-Brass	81	38 BSP
128077	Storz 65 X 52mm NH Female Adaptor-Brass	81	52 NH
128079	Storz 65 X 52mm BSP Female Adaptor-Brass	81	52 BSP
128083	Storz 65 X 65mm NH Female Adaptor-Brass	81	65 NH
128085	Storz 65 X 65mm BSP Female Adaptor-Brass	81	65 BSP
128087	Storz 65 X 75mm BSP Female Adaptor-Brass	81	75 BSP
128091	Storz 65 X CFA Female Adaptor-Brass	81	CFA
128093	Storz 65 X MFB Female Adaptor-Brass	81	MFB
128095	Storz 65 X NSW Female Adaptor-Brass	81	NSW
128097	Storz 65 X QRT Female Adaptor-Brass	81	QRT
128099	Storz 65 X SA Female Adaptor-Brass	81	SA
128101	Storz 65 X BI Female Adaptor-Brass	81	BI
128103	Storz 75 X 52mm BSP Female Adaptor-Brass	89	52 BSP
128107	Storz 75 X 65mm BSP Female Adaptor-Brass	89	65 BSP
128120	Storz 100 X 65mm BSP Female Adaptor-Brass	115	65 BSP
128124	Storz 100 X 75mm BSP Female Adaptor-Brass	115	75 BSP
128128	Storz 100 X 100mm BSP Female Adaptor-Brass	115	100BSP
128130	Storz 125 X 65mm BSP Female Adaptor-Brass	148	65 BSP
128134	Storz 125 X 75mm BSP Female Adaptor-Brass	148	75 BSP
128142	Storz 125 X 100mm BSP Female Adaptor-Brass	148	100BSP
128146	Storz 125 X 125mm BSP Female Adaptor-Brass	148	125BSP

Storz Male Adaptor - Forged Brass

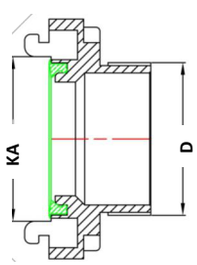

PART No.	DESCRIPTION	KA	D
128158	Storz 25 X 19mm BSP Male Adaptor-Brass	31	19 BSP
128162	Storz 25 X 25mm NH Male Adaptor-Brass	31	25 NH
128166	Storz 25 X 25mm NPSH Male Adaptor-Brass	31	25 NPSH
128170	Storz 25 X 25mm BSP Male Adaptor-Brass	31	25 BSP
128174	Storz 38 X 38mm NH Male Adaptor-Brass	52	38 NH
128178	Storz 38 X 38mm NPSH Male Adaptor-Brass	52	38 NPSH
128186	Storz 38 X 38mm BSP Male Adaptor-Brass	52	38 BSP
128190	Storz 52 X 38mm NH Male Adaptor-Brass	66	38 NH
128192	Storz 52 X 52mm NH Male Adaptor-Brass	66	52 NH
128196	Storz 52 X 38mm BSP Male Adaptor-Brass	66	38 BSP
128200	Storz 52 X 52mm BSP Male Adaptor-Brass	66	52 BSP
128206	Storz 65 X 38mm NH Male Adaptor-Brass	81	38 NH
128208	Storz 65 X 38mm BSP Male Adaptor-Brass	81	38 BSP
128212	Storz 65 X 52mm NH Male Adaptor-Brass	81	52 NH
128214	Storz 65 X 52mm BSP Male Adaptor-Brass	81	52 BSP
128218	Storz 65 X 65mm NH Male Adaptor-Brass	81	65 NH
128220	Storz 65 X 65mm BSP Male Adaptor-Brass	81	65 BSP
128224	Storz 65 X 75mm BSP Male Adaptor-Brass	81	75 BSP
128228	Storz 65 X CFA Male Adaptor-Brass	81	CFA
128232	Storz 65 X MFB Male Adaptor-Brass	81	MFB
128236	Storz 65 X NSW Male Adaptor-Brass	81	NSW
128240	Storz 65 X QRT Male Adaptor-Brass	81	QRT
128244	Storz 65 X SA Male Adaptor-Brass	81	SA
128248	Storz 65 X BI Male Adaptor-Brass	81	BI
128249	Storz 75 X 52mm BSP Male Adaptor-Brass	89	52 BSP
128253	Storz 75 X 65mm BSP Male Adaptor-Brass	89	65 BSP
128257	Storz 75 X 75mm BSP Male Adaptor-Brass	89	75 BSP
128269	Storz 100 X 65mm BSP Male Adaptor-Brass	115	65 BSP
128273	Storz 100 X 75mm BSP Male Adaptor-Brass	115	75 BSP
128277	Storz 100 X 100mm BSP Male Adaptor-Brass	115	100BSP
128281	Storz 125 X 65mm BSP Male Adaptor-Brass	148	65 BSP
128285	Storz 125 X 75mm BSP Male Adaptor-Brass	148	75 BSP
128293	Storz 125 X 100mm BSP Male Adaptor-Brass	148	100BSP
128297	Storz 125 X 125mm BSP Male Adaptor-Brass	148	125BSP

Fire Australia Co Pty Ltd.
ABN No. 13165523713
47 Rushdale St. Knoxfield VIC-3180. Tel:(03) 9764 0020, Fax: (03) 9764 0023.
E-mail : sales@fireausco.com.au www.fireausco.com.au

FIRE AUSTRALIA CO

Storz Reducers - Forged Brass

PART No.	DESCRIPTION
128309	Storz 38 X Storz 25 Fixed Reducer-Brass
128311	Storz 38 X Storz 25 Swivel Reducer-Brass
128313	Storz 52 X Storz 25 Fixed Reducer-Brass
128315	Storz 52 X Storz 25 Swivel Reducer-Brass
128317	Storz 52 X Storz 38 Fixed Reducer-Brass
128319	Storz 52 X Storz 38 Swivel Reducer-Brass
128321	Storz 65 X Storz 25 Fixed Reducer-Brass
128323	Storz 65 X Storz 25 Swivel Reducer-Brass
128325	Storz 65 X Storz 38 Fixed Reducer-Brass
128327	Storz 65 X Storz 38 Swivel Reducer-Brass
128329	Storz 65 X Storz 52 Fixed Reducer-Brass
128331	Storz 65 X Storz 52 Swivel Reducer-Brass
128333	Storz 75 X Storz 52 Fixed Reducer-Brass
128335	Storz 75 X Storz 52 Swivel Reducer-Brass
128337	Storz 75 X Storz 65 Fixed Reducer-Brass
128339	Storz 75 X Storz 65 Swivel Reducer-Brass
128357	Storz 125 X Storz 100 Fixed Reducer-Brass
128359	Storz 125 X Storz 100 Swivel Reducer-Brass

Caps - Forged Brass

PART No.	DESCRIPTION
128369	Storz 25 Cap-Brass
128371	Storz 38 Cap-Brass
128373	Storz 50 Cap-Brass
128375	Storz 65 Cap-Brass
128378	Storz 75 Cap-Brass
128382	Storz 100 Cap-Brass
128384	Storz 125 Cap-Brass

Storz Tree Adaptor - Aluminium Storz Fittings are Forged

PART No.	DESCRIPTION
128426	Storz Tree 150mm-125mm-100mm-90mm-75mm-65mm with 65mm cap Aluminium Forged with Nipples

PART No.	DESCRIPTION
128427	Storz Tree 125mm-100mm-90mm-75mm-65mm with 65mm cap Aluminium Forged with BSP Nipples

PART No.	DESCRIPTION
128428	Storz Tree 100mm-90mm-75mm-65mm with 65mm cap Aluminium Forged with BSP Nipples

PART No.	DESCRIPTION
128429	Storz Tree 90mm-75mm-65mm with 65mm cap Aluminium Forged with BSP Nipples

PART No.	DESCRIPTION
128430	Storz Tree 75mm-65mm with 65mm cap Aluminium Forged with BSP Nipples

PART No.	DESCRIPTION
128431	Storz Tree 150x125x100x90x75 with 75mm cap Aluminium Forged with BSP Nipples
128432	Storz Tree 150x125x100x90 with 75mm cap Aluminium Forged with BSP Nipples
128433	Storz Tree 150x125x100 with 75mm cap Aluminium Forged with BSP Nipples
128434	Storz Tree 150x125 with 75mm cap Aluminium Forged with BSP Nipples

Fire Australia Co Pty Ltd.
ABN No. 13165523713
47 Rushdale St. Knoxfield VIC-3180. Tel:(03) 9764 0020, Fax: (03) 9764 0023.
E-mail : sales@fireausco.com.au www.fireausco.com.au

FIRE AUSTRALIA CO

Standpipes / Fire Hydrant Standpipe With Handwheel -Single Outlet - Forged Aluminium Adaptor

PART No.	DESCRIPTION
138001	Standpipe 65mm BSP Male Single Outlet with H/Wheel & 600mm Aluminium Barrel
138002	Standpipe 65mm Storz Single Outlet with H/Wheel & 600mm Aluminium Barrel
138003	Standpipe 65mm CFA Male Single Outlet with H/Wheel & 600mm Aluminium Barrel
138004	Standpipe 65mm MFB Male Single Outlet with H/Wheel & 600mm Aluminium Barrel
138005	Standpipe 65mm NSW Male Single Outlet with H/Wheel & 600mm Aluminium Barrel
138006	Standpipe 65mm QRT Male Single Outlet with H/Wheel & 600mm Aluminium Barrel
138007	Standpipe 65mm SA Male Single Outlet with H/Wheel & 600mm Aluminium Barrel
138008	Standpipe 65mm BI Male Single Outlet with H/Wheel & 600mm Aluminium Barrel
138017	Standpipe 65mm BSP Male Single Outlet with H/Wheel & 750mm Aluminium Barrel
138018	Standpipe 65mm Storz Single Outlet with H/Wheel & 750mm Aluminium Barrel
138019	Standpipe 65mm CFA Male Single Outlet with H/Wheel & 750mm Aluminium Barrel
138020	Standpipe 65mm MFB Male Single Outlet with H/Wheel & 750mm Aluminium Barrel
138021	Standpipe 65mm NSW Male Single Outlet with H/Wheel & 750mm Aluminium Barrel
138022	Standpipe 65mm QRT Male Single Outlet with H/Wheel & 750mm Aluminium Barrel
138023	Standpipe 65mm SA Male Single Outlet with H/Wheel & 750mm Aluminium Barrel
138024	Standpipe 65mm BI Male Single Outlet with H/Wheel & 750mm Aluminium Barrel
138033	Standpipe 65mm BSP Male Single Outlet with H/Wheel & 900mm Aluminium Barrel
138034	Standpipe 65mm Storz Single Outlet with H/Wheel & 900mm Aluminium Barrel
138035	Standpipe 65mm CFA Male Single Outlet with H/Wheel & 900mm Aluminium Barrel
138036	Standpipe 65mm MFB Male Single Outlet with H/Wheel & 900mm Aluminium Barrel
138037	Standpipe 65mm NSW Male Single Outlet with H/Wheel & 900mm Aluminium Barrel
138038	Standpipe 65mm QRT Male Single Outlet with H/Wheel & 900mm Aluminium Barrel
138039	Standpipe 65mm SA Male Single Outlet with H/Wheel & 900mm Aluminium Barrel
138040	Standpipe 65mm BI Male Single Outlet with H/Wheel & 900mm Aluminium Barrel

Standpipes / Fire Hydrant Standpipe With Tee Handle -Single Outlet - Forged Aluminium Adaptor

PART No.	DESCRIPTION
138009	Standpipe 65mm BSP Male Single Outlet with T HANDLE & 600mm Aluminium Barrel
138010	Standpipe 65mm Storz Male Single Outlet with T HANDLE & 600mm Aluminium Barrel
138011	Standpipe 65mm CFA Male Single Outlet with T HANDLE & 600mm Aluminium Barrel
138012	Standpipe 65mm MFB Male Single Outlet with T HANDLE & 600mm Aluminium Barrel
138013	Standpipe 65mm NSW Male Single Outlet with T HANDLE & 600mm Aluminium Barrel
138014	Standpipe 65mm QRT Male Single Outlet with T HANDLE & 600mm Aluminium Barrel
138015	Standpipe 65mm SA Male Single Outlet with T HANDLE & 600mm Aluminium Barrel
138016	Standpipe 65mm BI Male Single Outlet with T HANDLE & 600mm Aluminium Barrel
138025	Standpipe 65mm BSP Male Single Outlet with T HANDLE & 750mm Aluminium Barrel
138026	Standpipe 65mm Storz Male Single Outlet with T HANDLE & 750mm Aluminium Barrel
138027	Standpipe 65mm CFA Male Single Outlet with T HANDLE & 750mm Aluminium Barrel
138028	Standpipe 65mm MFB Male Single Outlet with T HANDLE & 750mm Aluminium Barrel
138029	Standpipe 65mm NSW Male Single Outlet with T HANDLE & 750mm Aluminium Barrel
138030	Standpipe 65mm QRT Male Single Outlet with T HANDLE & 750mm Aluminium Barrel
138031	Standpipe 65mm SA Male Single Outlet with T HANDLE & 750mm Aluminium Barrel
138032	Standpipe 65mm BI Male Single Outlet with T HANDLE & 750mm Aluminium Barrel

Standpipes With Tee Handle-Single Outlet - with Forged Aluminium Adaptor

PART No.	DESCRIPTION
138041	Standpipe 65mm BSP Male Single Outlet with T HANDLE & 900mm Aluminium Barrel
138042	Standpipe 65mm Storz Male Single Outlet with T HANDLE & 900mm Aluminium Barrel
138043	Standpipe 65mm CFA Male Single Outlet with T HANDLE & 900mm Aluminium Barrel
138044	Standpipe 65mm MFB Male Single Outlet with T HANDLE & 900mm Aluminium Barrel
138045	Standpipe 65mm NSW Male Single Outlet with T HANDLE & 900mm Aluminium Barrel
138046	Standpipe 65mm QRT Male Single Outlet with T HANDLE & 900mm Aluminium Barrel
138047	Standpipe 65mm SA Male Single Outlet with T HANDLE & 900mm Aluminium Barrel
138048	Standpipe 65mm BI Male Single Outlet with T HANDLE & 900mm Aluminium Barrel

Standpipes With Handwheel Dual Outlet - with Forged Aluminium Adaptor

PART No.	DESCRIPTION
138049	Standpipe 65mm Dual BSP Male Outlet with H/Wheel Aluminium Barrel
138050	Standpipe 65mm Dual Storz Outlet with H/Wheel Aluminium Barrel
138051	Standpipe 65mm Dual CFA Male Outlet with H/Wheel Aluminium Barrel
138052	Standpipe 65mm Dual MFB Male Outlet with H/Wheel Aluminium Barrel
138053	Standpipe 65mm Dual NSW Male Outlet with H/Wheel Aluminium Barrel
138054	Standpipe 65mm Dual QRT Male Outlet with H/Wheel Aluminium Barrel
138055	Standpipe 65mm Dual SA Male Outlet with H/Wheel Aluminium Barrel
138056	Standpipe 65mm Dual BI Male Outlet with H/Wheel Aluminium Barrel
138057	Standpipe 65mm Dual BSP Male Outlet with T handle Aluminium Barrel
138058	Standpipe 65mm Dual Storz Male Outlet with T handle Aluminium Barrel
138059	Standpipe 65mm Dual CFA Male Outlet with T handle Aluminium Barrel
138060	Standpipe 65mm Dual MFB Male Outlet with T handle Aluminium Barrel
138061	Standpipe 65mm Dual NSW Male Outlet with T handle Aluminium Barrel
138062	Standpipe 65mm Dual QRT Male Outlet with T handle Aluminium Barrel
138063	Standpipe 65mm Dual SA Male Outlet with T handle Aluminium Barrel
138064	Standpipe 65mm Dual BI Male Outlet with T handle Aluminium Barrel

Fire Australia Co Pty Ltd.
ABN No. 13165523713
47 Rushdale St. Knoxfield VIC-3180. Tel:(03) 9764 0020, Fax: (03) 9764 0023.
E-mail : sales@fireausco.com.au www.fireausco.com.au

Standpipe With BI Single Outlet - Aluminium

PART No.	DESCRIPTION
138069	Aluminium Standpipe BI Single Outlet

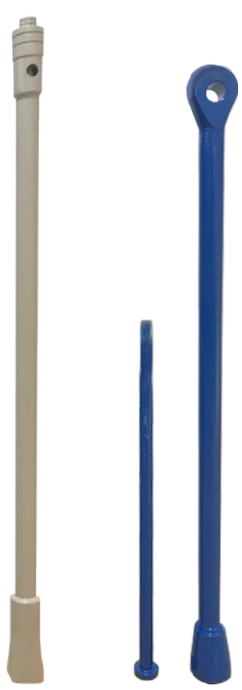

138070 138071

Underground Hydrant/Sluice Valve Key

PART No.	DESCRIPTION
138070	Underground Hydrant/Sluice Valve Key
138071	Heavy Duty Underground Hydrant/Sluice Valve Key

90° Wye / Breeches / Dividers Uncontrolled With Aluminium Adaptors

PART NO.	DESCRIPTION
134000	WYE Dividers Aluminium Uncontrolled with 65mm BSP Male Threads

Wye Dividers also come with below Inlet and Outlet options available in Aluminium & Brass P.O.A.
Storz, CFA, MFB, NSW, QRT, BI & SA please specify in order

Uncontrolled 45° Dividers With Aluminium Adaptors

PART NO.	DESCRIPTION
134028	Uncontrolled 45° Divider With BSP Male Threads

Wye Dividers also come with below Inlet and Outlet options available in Aluminium & Brass P.O.A.
Storz, CFA, MFB, NSW, QRT, BI & SA please specify in order

Controlled 45° Dividers With Aluminium Adaptors

PART NO.	DESCRIPTION
134054	Controlled 45° Divider With BSP Male Threads

Wye Dividers also come with below Inlet and Outlet options available in Aluminium & Brass P.O.A.
Storz, CFA, MFB, NSW, QRT, BI & SA please specify in order

Fire Australia Co Pty Ltd.
ABN No. 13165523713
47 Rushdale St. Knoxfield VIC-3180. Tel:(03) 9764 0020, Fax: (03) 9764 0023.
E-mail : sales@fireausco.com.au www.fireausco.com.au

FIRE AUSTRALIA CO

Coupling Male To Hose Tail - Forged Brass

PART No.	DESCRIPTION
124073	25 BSP Male X 25 Ribbed Tail-Forged Brass
124074	38 BSP Male X 38 Ribbed Tail-Forged Brass
124075	50 BSP Male X 50 Ribbed Tail-Forged Brass
120137	CFA Male X 19 Barbed Tail-Forged Brass
120138	CFA Male X 25 Barbed Tail-Forged Brass
120090	CFA Male X 32 Ribbed Tail-Forged Brass
120091	CFA Male X 38 Ribbed Tail-Forged Brass
120092	CFA Male X 50 Ribbed Tail-Forged Brass
120093	CFA Male X 65 Ribbed Tail-Forged Brass
120094	CFA Male X 89 Ribbed Tail-Forged Brass
121090	MFB Male X 38 Ribbed Tail-Forged Brass
121091	MFB Male X 50 Ribbed Tail-Forged Brass
121092	MFB Male X 65 Ribbed Tail-Forged Brass
122090	NSW Male X 38 Ribbed Tail-Brass
122091	NSW Male X 50 Ribbed Tail-Brass
122092	NSW Male X 65 Ribbed Tail-Brass
123090	QRT Male X 38 Ribbed Tail-Forged Brass
123091	QRT Male X 50 Ribbed Tail-Forged Brass
123092	QRT Male X 65 Ribbed Tail-Forged Brass

Coupling Female To Hose Tail - Forged Brass

PART No.	DESCRIPTION
124076	25 BSP Female X 25 Ribbed Tail-Forged Brass
124077	38 BSP Female X 38 Ribbed Tail-Forged Brass
124078	50 BSP Female X 50 Ribbed Tail-Forged Brass
120139	CFA Female X 19 Barbed Tail-Forged Brass
120140	CFA Female X 25 Barbed Tail-Forged Brass
120095	CFA Female X 32 Ribbed Tail-Forged Brass
120096	CFA Female X 38 Ribbed Tail-Forged Brass
120097	CFA Female X 50 Ribbed Tail-Forged Brass
120098	CFA Female X 65 Ribbed Tail-Forged Brass
120099	CFA Female X 89 Ribbed Tail-Forged Brass
121093	MFB Female X 38 Ribbed Tail-Forged Brass
121094	MFB Female X 50 Ribbed Tail-Forged Brass
121095	MFB Female X 65 Ribbed Tail-Forged Brass
122093	NSW Female X 38 Ribbed Tail-Forged Brass
122094	NSW Female X 50 Ribbed Tail-Forged Brass
122095	NSW Female X 65 Ribbed Tail-Forged Brass
123093	QRT Female X 38 Ribbed Tail-Forged Brass
123094	QRT Female X 50 Ribbed Tail-Forged Brass
123095	QRT Female X 65 Ribbed Tail-Forged Brass

Hose Nut & Barbed Tail - Forged Brass

PART No.	DESCRIPTION
211001	Brass 20mm BSP Female Nut X 15mm Barbed Tail
211002	Brass 20mm BSP Female Nut X 20mm Barbed Tail
211003	Brass 25mm BSP Female Nut X 20mm Barbed Tail
211004	Brass 25mm BSP Female Nut X 25mm Barbed Tail
211005	Brass 32mm BSP Female Nut X 32mm Barbed Tail
211006	Brass 40mm BSP Female Nut X 40mm Barbed Tail
211007	Brass 50mm BSP Female Nut X 50mm Barbed Tail
211008	Brass 65mm BSP Female Nut X 65mm Barbed Tail
211009	Brass 80mm BSP Female Nut X 80mm Barbed Tail
211010	Brass 100mm BSP Female Nut X 100mm Barbed Tail

Coupling Male To Hose Tail - Forged Aluminium

PART No.	DESCRIPTION
123099	QRT Male X 38 Ribbed Tail-Forged Aluminium
123100	QRT Male X 50 Ribbed Tail-Forged Aluminium
123101	QRT Male X 65 Ribbed Tail-Forged Aluminium
124064	SA Male X 38 Ribbed Tail-Forged Aluminium
124065	SA Male X 50 Ribbed Tail-Forged Aluminium
124066	SA Male X 65 Ribbed Tail-Forged Aluminium

Coupling Female To Hose Tail - Forged Aluminium

PART No.	DESCRIPTION
123102	QRT Female X 38 Ribbed Tail-Forged Aluminium
123103	QRT Female X 50 Ribbed Tail-Forged Aluminium
123104	QRT Female X 65 Ribbed Tail-Forged Aluminium
124067	SA Female X 38 Ribbed Tail-Forged Aluminium
124069	SA Female X 65 Ribbed Tail-Forged Aluminium

Coupling Male To Hose Tail - Plastic

PART No.	DESCRIPTION
120123	CFA Male X 38 Ribbed Tail-Plastic
120125	CFA Male X 65 Ribbed Tail-Plastic
121108	MFB Male X 38 Ribbed Tail-Plastic
121110	MFB Male X 65 Ribbed Tail-Plastic

Coupling Female To Hose Tail - Plastic

PART No.	DESCRIPTION
120126	CFA Female X 38 Ribbed Tail-Plastic
120128	CFA Female X 65 Ribbed Tail-Plastic
121111	MFB Female X 38 Ribbed Tail-Plastic
121113	MFB Female X 65 Ribbed Tail-Plastic

Fire Australia Co Pty Ltd.
ABN No. 13165523713
47 Rushdale St. Knoxfield VIC-3180. Tel:(03) 9764 0020, Fax: (03) 9764 0023.
E-mail : sales@fireausco.com.au www.fireausco.com.au

Coupling Set - Forged Brass

PART No.	DESCRIPTION
124079	25 BSP X 25 Ribbed Tail Coupling Set-Forged Brass
124080	38 BSP X 38 Ribbed Tail Coupling Set-Forged Brass
124081	50 BSP X 50 Ribbed Tail Coupling Set-Forged Brass
124084	65 BSP X 65 Ribbed Tail Coupling Set-Forged Brass
120141	CFA X 19 Barbed Tail Coupling Set-Forged Brass
120142	CFA X 25 Barbed Tail Coupling Set-Forged Brass
120100	CFA X 32 Ribbed Tail Coupling Set-Forged Brass
120101	CFA X 38 Ribbed Tail Coupling Set-Forged Brass
120102	CFA X 50 Ribbed Tail Coupling Set-Forged Brass
120103	CFA X 65 Ribbed Tail Coupling Set-Forged Brass
120104	CFA X 89 Ribbed Tail Coupling Set-Forged Brass
121096	MFB X 38 Ribbed Tail Coupling Set-Forged Brass
121097	MFB X 50 Ribbed Tail Coupling Set-Forged Brass
121098	MFB X 65 Ribbed Tail Coupling Set-Forged Brass
122096	NSW X 38 Ribbed Tail Coupling Set-Forged Brass
122097	NSW X 50 Ribbed Tail Coupling Set-Forged Brass
122098	NSW X 65 Ribbed Tail Coupling Set-Forged Brass

Coupling Set - Stainless Steel

PART No.	DESCRIPTION
120111	CFA X 38 Ribbed Tail Coupling Set-Stainless Steel
120113	CFA X 65 Ribbed Tail Coupling Set-Stainless Steel

Coupling Set - Forged Aluminium

PART No.	DESCRIPTION
120120	CFA X 38 Ribbed Tail Coupling Set-Forged Aluminium
120122	CFA X 65 Ribbed Tail Coupling Set-Forged Aluminium
121105	MFB X 38 Ribbed Tail Coupling Set-Forged Aluminium
121107	MFB X 65 Ribbed Tail Coupling Set-Forged Aluminium
122105	NSW X 38 Ribbed Tail Coupling Set-Forged Aluminium
122107	NSW X 65 Ribbed Tail Coupling Set-Forged Aluminium
123105	QRT X 38 Ribbed Tail Coupling Set-Forged Aluminium
123107	QRT X 65 Ribbed Tail Coupling Set-Forged Aluminium
124070	SA X 38 Ribbed Tail Coupling Set-Forged Aluminium
124072	SA X 65 Ribbed Tail Coupling Set-Forged Aluminium

Coupling Set - Plastic

PART No.	DESCRIPTION
120129	CFA X 38 Ribbed Tail Coupling Set-Plastic
120131	CFA X 65 Ribbed Tail Coupling Set-Plastic
121114	MFB X 38 Ribbed Tail Coupling Set-Plastic
121116	MFB X 65 Ribbed Tail Coupling Set-Plastic
122114	NSW X 38 Ribbed Tail Coupling Set-Plastic
122116	NSW X 65 Ribbed Tail Coupling Set-Plastic

Fire Australia Co Pty Ltd.
ABN No. 13165523713
47 Rushdale St. Knoxfield VIC-3180. Tel:(03) 9764 0020, Fax: (03) 9764 0023.
E-mail : sales@fireausco.com.au www.fireausco.com.au

FIRE AUSTRALIA CO

Male To Female Adaptors - Forged Brass

PART No.	DESCRIPTION
120001	CFA Male X 38 BSP Female Adaptor Brass Forged
120002	CFA Male X 50 BSP Female Adaptor Brass Forged
120003	CFA Male X 65 BSP Female Adaptor Brass Forged
120004	CFA Male X MFB Female Adaptor Brass Forged
121001	MFB Male X 38 BSP Female Adaptor Brass Forged
121002	MFB Male X 50 BSP Female Adaptor Brass Forged
121003	MFB Male X 65 BSP Female Adaptor Brass Forged
121004	MFB Male X MFB Female Adaptor Brass Forged
122001	NSW Male X 38 BSP Female Adaptor Brass Forged
122002	NSW Male X 50 BSP Female Adaptor Brass Forged
122003	NSW Male X 65 BSP Female Adaptor Brass Forged
122004	NSW Male X NSW Female Adaptor Brass Forged
123001	QRT Male X 38 BSP Female Adaptor Brass Forged
123002	QRT Male X 50 BSP Female Adaptor Brass Forged
123003	QRT Male X 65 BSP Female Adaptor Brass Forged
124001	SA Male X 38 BSP Female Adaptor Brass Forged
124002	SA Male X 50 BSP Female Adaptor Brass Forged
124003	SA Male X 65 BSP Female Adaptor Brass Forged

Male To Male Adaptors - Forged Brass

PART No.	DESCRIPTION
120005	CFA Male X 38 BSP Male Brass Adaptor
120006	CFA Male X 50 BSP Male Brass Adaptor
120007	CFA Male X 65 BSP Male Brass Adaptor
120133	CFA Male X 75 BSP Male Brass Adaptor
121005	MFB Male X 38 BSP Male Brass Adaptor
121006	MFB Male X 50 BSP Male Brass Adaptor
121007	MFB Male X 65 BSP Male Brass Adaptor
122005	NSW Male X 38 BSP Male Brass Adaptor
122006	NSW Male X 50 BSP Male Brass Adaptor
122007	NSW Male X 65 BSP Male Brass Adaptor
123004	QRT Male X 38 BSP Male Brass Adaptor
123005	QRT Male X 50 BSP Male Brass Adaptor
123006	QRT Male X 65 BSP Male Brass Adaptor
124004	SA Male X 38 BSP Male Brass Adaptor
124005	SA Male X 50 BSP Male Brass Adaptor
124006	SA Male X 65 BSP Male Brass Adaptor

Fire Australia Co Pty Ltd.
ABN No. 13165523713
47 Rushdale St. Knoxfield VIC-3180. Tel:(03) 9764 0020, Fax: (03) 9764 0023.
E-mail : sales@fireausco.com.au www.fireausco.com.au

Female To Female Adators - Forged Brass

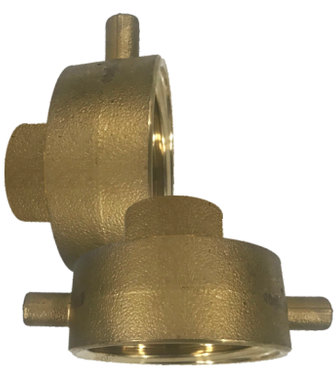

PART No.	DESCRIPTION
120014	CFA Female X 19 BSP Female Adaptor Brass Forged
120015	CFA Female X 25 BSP Female Adaptor Brass Forged
120016	CFA Female X 32 BSP Female Adaptor Brass Forged
120017	CFA Female X 38 BSP Female Adaptor Brass Forged
120018	CFA Female X 50 BSP Female Adaptor Brass Forged
120019	CFA Female X 65 BSP Female Adaptor Brass Forged
121014	MFB Female X 19 BSP Female Adaptor Brass Forged
121015	MFB Female X 25 BSP Female Adaptor Brass Forged
121016	MFB Female X 32 BSP Female Adaptor Brass Forged
121017	MFB Female X 38 BSP Female Adaptor Brass Forged
121018	MFB Female X 50 BSP Female Adaptor Brass Forged
121019	MFB Female X 65 BSP Female Adaptor Brass Forged
122014	NSW Female X 19 BSP Female Adaptor Brass Forged
122015	NSW Female X 25 BSP Female Adaptor Brass Forged
122016	NSW Female X 32 BSP Female Adaptor Brass Forged
122017	NSW Female X 38 BSP Female Adaptor Brass Forged
122018	NSW Female X 50 BSP Female Adaptor Brass Forged
122019	NSW Female X 65 BSP Female Adaptor Brass Forged
123013	QRT Female X 19 BSP Female Adaptor Brass Forged
123014	QRT Female X 25 BSP Female Adaptor Brass Forged
123015	QRT Female X 32 BSP Female Adaptor Brass Forged
123016	QRT Female X 38 BSP Female Adaptor Brass Forged
123017	QRT Female X 50 BSP Female Adaptor Brass Forged
123018	QRT Female X 65 BSP Female Adaptor Brass Forged
124013	SA Female X 19 BSP Female Adaptor Brass Forged
124014	SA Female X 25 BSP Female Adaptor Brass Forged
124015	SA Female X 32 BSP Female Adaptor Brass Forged
124016	SA Female X 38 BSP Female Adaptor Brass Forged
124017	SA Female X 50 BSP Female Adaptor Brass Forged
124018	SA Female X 65 BSP Female Adaptor Brass Forged

Fire Australia Co Pty Ltd.
ABN No. 13165523713
47 Rushdale St. Knoxfield VIC-3180. Tel:(03) 9764 0020, Fax: (03) 9764 0023.
E-mail : sales@fireausco.com.au www.fireausco.com.au

FIRE AUSTRALIA CO

Female To Female Adaptors With Inserts (Swivel) - Forged Brass

PART No.	DESCRIPTION
120025	CFA Female X 19 BSP Female Brass Adaptor With Insert
120026	CFA Female X 25 BSP Female Brass Adaptor With Insert
120027	CFA Female X 32 BSP Female Brass Adaptor With Insert
120028	CFA Female X 38 BSP Female Brass Adaptor With Insert
120029	CFA Female X 50 BSP Female Brass Adaptor With Insert
121025	MFB Female X 19 BSP Female Brass Adaptor With Insert
121026	MFB Female X 25 BSP Female Brass Adaptor With Insert
121027	MFB Female X 32 BSP Female Brass Adaptor With Insert
121028	MFB Female X 38 BSP Female Brass Adaptor With Insert
121029	MFB Female X 50 BSP Female Brass Adaptor With Insert
122025	NSW Female X 19 BSP Female Brass Adaptor With Insert
122026	NSW Female X 25 BSP Female Brass Adaptor With Insert
122027	NSW Female X 32 BSP Female Brass Adaptor With Insert
122028	NSW Female X 38 BSP Female Brass Adaptor With Insert
122029	NSW Female X 50 BSP Female Brass Adaptor With Insert
123024	QRT Female X 19 BSP Female Brass Adaptor With Insert
123025	QRT Female X 25 BSP Female Brass Adaptor With Insert
123026	QRT Female X 32 BSP Female Brass Adaptor With Insert
123027	QRT Female X 38 BSP Female Brass Adaptor With Insert
123028	QRT Female X 50 BSP Female Brass Adaptor With Insert
124024	SA Female X 19 BSP Female Brass Adaptor With Insert
124025	SA Female X 25 BSP Female Brass Adaptor With Insert
124026	SA Female X 32 BSP Female Brass Adaptor With Insert
124027	SA Female X 38 BSP Female Brass Adaptor With Insert
124028	SA Female X 50 BSP Female Brass Adaptor With Insert

Fire Australia Co Pty Ltd.
ABN No. 13165523713
47 Rushdale St. Knoxfield VIC-3180. Tel:(03) 9764 0020, Fax: (03) 9764 0023.
E-mail : sales@fireausco.com.au www.fireausco.com.au

Female To Female Adaptors With Inserts (Swivel) - Forged Aluminium

PART No.	DESCRIPTION
120042	CFA Female X 19 BSP Female Aluminium Adaptor With Insert
120043	CFA Female X 25 BSP Female Aluminium Adaptor With Insert
120044	CFA Female X 32 BSP Female Aluminium Adaptor With Insert
120045	CFA Female X 38 BSP Female Aluminium Adaptor With Insert
120046	CFA Female X 50 BSP Female Aluminium Adaptor With Insert
121042	MFB Female X 19 BSP Female Aluminium Adaptor With Insert
121043	MFB Female X 25 BSP Female Aluminium Adaptor With Insert
121044	MFB Female X 32 BSP Female Aluminium Adaptor With Insert
121045	MFB Female X 38 BSP Female Aluminium Adaptor With Insert
121046	MFB Female X 50 BSP Female Aluminium Adaptor With Insert
122042	NSW Female X 19 BSP Female Aluminium Adaptor With Insert
122043	NSW Female X 25 BSP Female Aluminium Adaptor With Insert
122044	NSW Female X 32 BSP Female Aluminium Adaptor With Insert
122045	NSW Female X 38 BSP Female Aluminium Adaptor With Insert
122046	NSW Female X 50 BSP Female Aluminium Adaptor With Insert
123042	QRT Female X 19 BSP Female Aluminium Adaptor With Insert
123043	QRT Female X 25 BSP Female Aluminium Adaptor With Insert
123044	QRT Female X 32 BSP Female Aluminium Adaptor With Insert
123045	QRT Female X 38 BSP Female Aluminium Adaptor With Insert
123046	QRT Female X 50 BSP Female Aluminium Adaptor With Insert
124042	SA Female X 19 BSP Female Aluminium Adaptor With Insert
124043	SA Female X 25 BSP Female Aluminium Adaptor With Insert
124044	SA Female X 32 BSP Female Aluminium Adaptor With Insert
124045	SA Female X 38 BSP Female Aluminium Adaptor With Insert
124046	SA Female X 50 BSP Female Aluminium Adaptor With Insert

Fire Australia Co Pty Ltd.
ABN No. 13165523713
47 Rushdale St. Knoxfield VIC-3180. Tel:(03) 9764 0020, Fax: (03) 9764 0023.
E-mail : sales@fireausco.com.au www.fireausco.com.au

FIRE AUSTRALIA CO

Female To Male Adaptors - Forged Brass

PART No.	DESCRIPTION
120008	CFA Female X 19 BSP Male Adaptor Brass Forged
120009	CFA Female X 25 BSP Male Adaptor Brass Forged
120010	CFA Female X 32 BSP Male Adaptor Brass Forged
120011	CFA Female X 38 BSP Male Adaptor Brass Forged
120012	CFA Female X 50 BSP Male Adaptor Brass Forged
120013	CFA Female X 65 BSP Male Adaptor Brass Forged
121008	MFB Female X 19 BSP Male Adaptor Brass Forged
121009	MFB Female X 25 BSP Male Adaptor Brass Forged
121010	MFB Female X 32 BSP Male Adaptor Brass Forged
121011	MFB Female X 38 BSP Male Adaptor Brass Forged
121012	MFB Female X 50 BSP Male Adaptor Brass Forged
121013	MFB Female X 65 BSP Male Adaptor Brass Forged
122008	NSW Female X 19 BSP Male Adaptor Brass Forged
122009	NSW Female X 25 BSP Male Adaptor Brass Forged
122010	NSW Female X 32 BSP Male Adaptor Brass Forged
122011	NSW Female X 38 BSP Male Adaptor Brass Forged
122012	NSW Female X 50 BSP Male Adaptor Brass Forged
122013	NSW Female X 65 BSP Male Adaptor Brass Forged
123007	QRT Female X 19 BSP Male Adaptor Brass Forged
123008	QRT Female X 25 BSP Male Adaptor Brass Forged
123009	QRT Female X 32 BSP Male Adaptor Brass Forged
123010	QRT Female X 38 BSP Male Adaptor Brass Forged
123011	QRT Female X 50 BSP Male Adaptor Brass Forged
123012	QRT Female X 65 BSP Male Adaptor Brass Forged
124007	SA Female X 19 BSP Male Adaptor Brass Forged
124008	SA Female X 25 BSP Male Adaptor Brass Forged
124009	SA Female X 32 BSP Male Adaptor Brass Forged
124010	SA Female X 38 BSP Male Adaptor Brass Forged
124011	SA Female X 50 BSP Male Adaptor Brass Forged
124012	SA Female X 65 BSP Male Adaptor Brass Forged

Female To Male Adaptors With Inserts (Swivel) - Forged Brass

PART No.	DESCRIPTION
120019	CFA Female X 19 BSP Male Brass Adaptor With Insert
120021	CFA Female X 25 BSP Male Brass Adaptor With Insert
120022	CFA Female X 32 BSP Male Brass Adaptor With Insert
120023	CFA Female X 38 BSP Male Brass Adaptor With Insert
120024	CFA Female X 50 BSP Male Brass Adaptor With Insert
121020	MFB Female X 19 BSP Male Brass Adaptor With Insert
121021	MFB Female X 25 BSP Male Brass Adaptor With Insert
121022	MFB Female X 32 BSP Male Brass Adaptor With Insert
121023	MFB Female X 38 BSP Male Brass Adaptor With Insert
121024	MFB Female X 50 BSP Male Brass Adaptor With Insert
122020	NSW Female X 19 BSP Male Brass Adaptor With Insert
122021	NSW Female X 25 BSP Male Brass Adaptor With Insert
122022	NSW Female X 32 BSP Male Brass Adaptor With Insert
122023	NSW Female X 38 BSP Male Brass Adaptor With Insert
122024	NSW Female X 50 BSP Male Brass Adaptor With Insert
123019	QRT Female X 19 BSP Male Brass Adaptor With Insert
123020	QRT Female X 25 BSP Male Brass Adaptor With Insert
123021	QRT Female X 32 BSP Male Brass Adaptor With Insert
123022	QRT Female X 38 BSP Male Brass Adaptor With Insert
123023	QRT Female X 50 BSP Male Brass Adaptor With Insert
124019	SA Female X 19 BSP Male Brass Adaptor With Insert
124020	SA Female X 25 BSP Male Brass Adaptor With Insert
124021	SA Female X 32 BSP Male Brass Adaptor With Insert
124022	SA Female X 38 BSP Male Brass Adaptor With Insert
124023	SA Female X 50 BSP Male Brass Adaptor With Insert

Fire Australia Co Pty Ltd.
ABN No. 13165523713
47 Rushdale St. Knoxfield VIC-3180. Tel:(03) 9764 0020, Fax: (03) 9764 0023.
E-mail : sales@fireausco.com.au www.fireausco.com.au

FIRE AUSTRALIA CO

Female To Male Adaptors With Inserts (Swivel) - Forged Aluminium

PART No.	DESCRIPTION
120047	CFA Female X 19 BSP Male Aluminium Adaptor With Insert
120048	CFA Female X 25 BSP Male Aluminium Adaptor With Insert
120049	CFA Female X 32 BSP Male Aluminium Adaptor With Insert
120050	CFA Female X 38 BSP Male Aluminium Adaptor With Insert
120051	CFA Female X 50 BSP Male Aluminium Adaptor With Insert
121047	MFB Female X 19 BSP Male Aluminium Adaptor With Insert
121048	MFB Female X 25 BSP Male Aluminium Adaptor With Insert
121049	MFB Female X 32 BSP Male Aluminium Adaptor With Insert
121050	MFB Female X 38 BSP Male Aluminium Adaptor With Insert
121051	MFB Female X 50 BSP Male Aluminium Adaptor With Insert
122047	NSW Female X 19 BSP Male Aluminium Adaptor With Insert
122048	NSW Female X 25 BSP Male Aluminium Adaptor With Insert
122049	NSW Female X 32 BSP Male Aluminium Adaptor With Insert
122050	NSW Female X 38 BSP Male Aluminium Adaptor With Insert
122051	NSW Female X 50 BSP Male Aluminium Adaptor With Insert
123047	QRT Female X 19 BSP Male Aluminium Adaptor With Insert
123048	QRT Female X 25 BSP Male Aluminium Adaptor With Insert
123049	QRT Female X 32 BSP Male Aluminium Adaptor With Insert
123050	QRT Female X 38 BSP Male Aluminium Adaptor With Insert
123051	QRT Female X 50 BSP Male Aluminium Adaptor With Insert
124047	SA Female X 19 BSP Male Aluminium Adaptor With Insert
124048	SA Female X 25 BSP Male Aluminium Adaptor With Insert
124049	SA Female X 32 BSP Male Aluminium Adaptor With Insert
124050	SA Female X 38 BSP Male Aluminium Adaptor With Insert
124051	SA Female X 50 BSP Male Aluminium Adaptor With Insert

Fire Australia Co Pty Ltd.
ABN No. 13165523713
47 Rushdale St. Knoxfield VIC-3180. Tel:(03) 9764 0020, Fax: (03) 9764 0023.
E-mail : sales@fireausco.com.au www.fireausco.com.au

Swivel Adaptors - Forged Brass

PART No.	DESCRIPTION
120057	CFA Female X 65 BSP Female Brass Swivel Adaptor
120058	CFA Female X 65 CFA Female Brass Swivel Adaptor
120059	CFA Female X 80 BSP Female Brass Swivel Adaptor
120065	CFA Female X 65 BSP Male Brass Swivel Adaptor
120066	CFA Female X 65 CFA Male Brass Swivel Adaptor
120067	CFA FemaleX 80 BSP Male Brass Swivel Adaptor

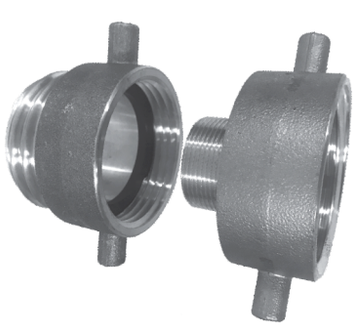

Female To Male Adaptors - Aluminium

PART No.	DESCRIPTION
120039	CFA Female X 38 BSP Male Aluminium Adaptor
120040	CFA Female X 50 BSP Male Aluminium Adaptor
120041	CFA Female X 65 BSP Male Aluminium Adaptor
121039	MFB Female X 38 BSP Male Aluminium Adaptor
121040	MFB Female X 50 BSP Male Aluminium Adaptor
121041	MFB Female X 65 BSP Male Aluminium Adaptor
122039	NSW Female X 38 BSP Male Aluminium Adaptor
122040	NSW Female X 50 BSP Male Aluminium Adaptor
122041	NSW Female X 65 BSP Male Aluminium Adaptor
123039	QRT Female X 38 BSP Male Aluminium Adaptor
123040	QRT Female X 50 BSP Male Aluminium Adaptor
123041	QRT Female X 65 BSP Male Aluminium Adaptor
124039	SA Female X 38 BSP Male Aluminium Adaptor
124040	SA Female X 50 BSP Male Aluminium Adaptor
124041	SA Female X 65 BSP Male Aluminium Adaptor

Fire Australia Co Pty Ltd.
ABN No. 13165523713
47 Rushdale St. Knoxfield VIC-3180. Tel:(03) 9764 0020, Fax: (03) 9764 0023.
E-mail : sales@fireausco.com.au www.fireausco.com.au

FIRE AUSTRALIA CO

Male To Female Adators - Forged Aluminium

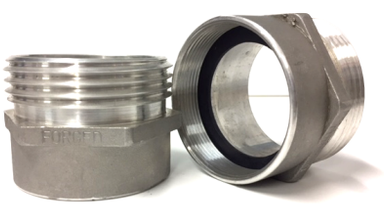

PART No.	DESCRIPTION
120030	CFA Male X 38 BSP Female Aluminium Adaptor
120031	CFA Male X 50 BSP Female Aluminium Adaptor
120032	CFA Male X 65 BSP Female Aluminium Adaptor
121030	MFB Male X 38 BSP Female Aluminium Adaptor
121031	MFB Male X 50 BSP Female Aluminium Adaptor
121032	MFB Male X 65 BSP Female Aluminium Adaptor
122030	NSW Male X 38 BSP Female Aluminium Adaptor
122031	NSW Male X 50 BSP Female Aluminium Adaptor
122032	NSW Male X 65 BSP Female Aluminium Adaptor
123030	QRT Male X 38 BSP Female Aluminium Adaptor
123031	QRT Male X 50 BSP Female Aluminium Adaptor
123032	QRT Male X 65 BSP Female Aluminium Adaptor
124030	SA Male X 38 BSP Female Aluminium Adaptor
124031	SA Male X 50 BSP Female Aluminium Adaptor
124032	SA Male X 65 BSP Female Aluminium Adaptor

Male To Male Adaptors - Forged Aluminium

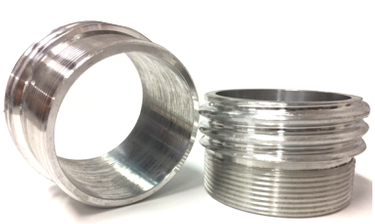

PART No.	DESCRIPTION
120036	CFA Male X 38 BSP Male Aluminium Adaptor
120037	CFA Male X 50 BSP Male Aluminium Adaptor
120038	CFA Male X 65 BSP Male Aluminium Adaptor
121033	MFB Male X 38 BSP Male Aluminium Adaptor
121034	MFB Male X 50 BSP Male Aluminium Adaptor
121035	MFB Male X 65 BSP Male Aluminium Adaptor
122033	NSW Male X 38 BSP Male Aluminium Adaptor
122034	NSW Male X 50 BSP Male Aluminium Adaptor
122035	NSW Male X 65 BSP Male Aluminium Adaptor
123033	QRT Male X 38 BSP Male Aluminium Adaptor
123034	QRT Male X 50 BSP Male Aluminium Adaptor
123035	QRT Male X 65 BSP Male Aluminium Adaptor
124033	SA Male X 38 BSP Male Aluminium Adaptor
124034	SA Male X 50 BSP Male Aluminium Adaptor
124035	SA Male X 65 BSP Male Aluminium Adaptor

Female To Male Swivel Adaptors - Forged Aluminium

PART No.	DESCRIPTION
120076	CFA Female X 19 BSP Male Aluminium Swivel Adaptor
120077	CFA Female X 25 BSP Male Aluminium Swivel Adaptor
120078	CFA Female X 32 BSP Male Aluminium Swivel Adaptor
120079	CFA Female X 38 BSP Male Aluminium Swivel Adaptor
120080	CFA Female X 50 BSP Male Aluminium Swivel Adaptor
120081	CFA Female X 65 BSP Male Aluminium Swivel Adaptor
120082	CFA Female X 65 CFA Male Aluminium Swivel Adaptor
120083	CFA Female X 80 BSP Male Aluminium Swivel Adaptor
121076	MFB Female X 19 BSP Male Aluminium Swivel Adaptor
121077	MFB Female X 25 BSP Male Aluminium Swivel Adaptor
121078	MFB Female X 32 BSP Male Aluminium Swivel Adaptor
121079	MFB Female X 38 BSP Male Aluminium Swivel Adaptor
121080	MFB Female X 50 BSP Male Aluminium Swivel Adaptor
121081	MFB Female X 65 BSP Male Aluminium Swivel Adaptor
121082	MFB Female X 65 MFB Male Aluminium Swivel Adaptor
121083	MFB Female X 80 BSP Male Aluminium Swivel Adaptor
122076	NSW Female X 19 BSP Male Aluminium Swivel Adaptor
122077	NSW Female X 25 BSP Male Aluminium Swivel Adaptor
122078	NSW Female X 32 BSP Male Aluminium Swivel Adaptor
122079	NSW Female X 38 BSP Male Aluminium Swivel Adaptor
122080	NSW Female X 50 BSP Male Aluminium Swivel Adaptor
122081	NSW Female X 65 BSP Male Aluminium Swivel Adaptor
122082	NSW Female X 65 NSW Male Aluminium Swivel Adaptor
122083	NSW Female X 80 BSP Male Aluminium Swivel Adaptor
123076	QRT Female X 19 BSP Male Aluminium Swivel Adaptor
123077	QRT Female X 25 BSP Male Aluminium Swivel Adaptor
123078	QRT Female X 32 BSP Male Aluminium Swivel Adaptor
123079	QRT Female X 38 BSP Male Aluminium Swivel Adaptor
123080	QRT Female X 50 BSP Male Aluminium Swivel Adaptor
123081	QRT Female X 65 BSP Male Aluminium Swivel Adaptor
123082	QRT Female X 65 QRT Male Aluminium Swivel Adaptor
123083	QRT Female X 80 BSP Male Aluminium Swivel Adaptor
124052	SA Female X 38 BSP Male Aluminium Swivel Adaptor
124053	SA Female X 50 BSP Male Aluminium Swivel Adaptor
124054	Sa Female X 65 BSP Male Aluminium Swivel Adaptor

Fire Australia Co Pty Ltd.
ABN No. 13165523713
47 Rushdale St. Knoxfield VIC-3180. Tel:(03) 9764 0020, Fax: (03) 9764 0023.
E-mail : sales@fireausco.com.au www.fireausco.com.au

FIRE AUSTRALIA CO

Female To Female Swivel Adaptors - Forged Aluminium

PART No.	DESCRIPTION
120068	CFA Female X 19 BSP Female Aluminium Swivel Adaptor
120069	CFA Female X 25 BSP Female Aluminium Swivel Adaptor
120070	CFA Female X 32 BSP Female Aluminium Swivel Adaptor
120071	CFA Female X 38 BSP Female Aluminium Swivel Adaptor
120072	CFA Female X 50 BSP Female Aluminium Swivel Adaptor
120073	CFA Female X 65 BSP Female Aluminium Swivel Adaptor
120074	CFA Female X 65 CFA Female Aluminium Swivel Adaptor
120075	CFA Female X 80 BSP Female Aluminium Swivel Adaptor
121068	MFB Female X 19 BSP Female Aluminium Swivel Adaptor
121069	MFB Female X 25 BSP Female Aluminium Swivel Adaptor
121070	MFB Female X 32 BSP Female Aluminium Swivel Adaptor
121071	MFB Female X 38 BSP Female Aluminium Swivel Adaptor
121072	MFB Female X 50 BSP Female Aluminium Swivel Adaptor
121073	MFB Female X 65 BSP Female Aluminium Swivel Adaptor
121074	MFB Female X 65 MFB Female Aluminium Swivel Adaptor
121075	MFB Female X 80 BSP Female Aluminium Swivel Adaptor
122068	NSW Female X 19 BSP Female Aluminium Swivel Adaptor
122069	NSW Female X 25 BSP Female Aluminium Swivel Adaptor
122070	NSW Female X 32 BSP Female Aluminium Swivel Adaptor
122071	NSW Female X 38 BSP Female Aluminium Swivel Adaptor
122072	NSW Female X 50 BSP Female Aluminium Swivel Adaptor
122073	NSW Female X 65 BSP Female Aluminium Swivel Adaptor
122074	NSW Female X 65 NSW Female Aluminium Swivel Adaptor
122075	NSW Female X 80 BSP Female Aluminium Swivel Adaptor
123068	QRT Female X 19 BSP Female Aluminium Swivel Adaptor
123069	QRT Female X 25 BSP Female Aluminium Swivel Adaptor
123070	QRT Female X 32 BSP Female Aluminium Swivel Adaptor
123071	QRT Female X 38 BSP Female Aluminium Swivel Adaptor
123072	QRT Female X 50 BSP Female Aluminium Swivel Adaptor
123073	QRT Female X 65 BSP Female Aluminium Swivel Adaptor
123074	QRT Female X 65 QRT Female Aluminium Swivel Adaptor
123075	QRT Female X 80 BSP Female Aluminium Swivel Adaptor
124055	SA Female X 38 BSP Female Aluminium Swivel Adaptor
124056	SA Female X 50 BSP Female Aluminium Swivel Adaptor
124057	SA Female X 65 BSP Female Aluminium Swivel Adaptor

Fire Australia Co Pty Ltd.
ABN No. 13165523713
47 Rushdale St. Knoxfield VIC-3180. Tel:(03) 9764 0020, Fax: (03) 9764 0023.
E-mail : sales@fireausco.com.au www.fireausco.com.au

Caps - Forged Brass

PART No.	DESCRIPTION		
120085	CFA	Brass	Cap
121085	MFB	Brass	Cap
122085	NSW	Brass	Cap
123085	QRT	Brass	Cap
124059	SA	Brass	Cap

Caps - Forged Aluminium

PART No.	DESCRIPTION		
120084	CFA	Aluminium	Cap
121084	MFB	Aluminium	Cap
122084	NSW	Aluminium	Cap
123084	QRT	Aluminium	Cap
124058	SA	Aluminium	Cap

Plugs Aluminium

PART No.	DESCRIPTION		
120087	CFA	Aluminium	Plug
121087	MFB	Aluminium	Plug
122087	NSW	Aluminium	Plug
123087	QRT	Aluminium	Plug
124061	SA	Aluminium	Plug

Caps Plastic

PART No.	DESCRIPTION		
120086	CFA	Plastic	Cap
121086	MFB	Plastic	Cap
122086	NSW	Plastic	Cap
123086	QRT	Plastic	Cap
124060	SA	Plastic	Cap
128376	Storz	Plastic	Cap

Plugs Plastic

PART No.	DESCRIPTION		
120089	CFA	Plastic	Plug
121089	MFB	Plastic	Plug
122089	NSW	Plastic	Plug
123089	QRT	Plastic	Plug
124063	SA	Plastic	Plug

Fire Australia Co Pty Ltd.
ABN No. 13165523713
47 Rushdale St. Knoxfield VIC-3180. Tel:(03) 9764 0020, Fax: (03) 9764 0023.
E-mail : sales@fireausco.com.au www.fireausco.com.au

FIRE AUSTRALIA CO

Approved : BS 336

Coupling Male BI-Hose Tail - Forged Brass

PART No.	DESCRIPTION
126001	BI Male X 38mm Hose Tail Coupling -Forged Brass
126002	BI Male X 45mm Hose Tail Coupling -Forged Brass
126003	BI Male X 50mm Hose Tail Coupling -Forged Brass
126004	BI Male X 65mm Hose Tail Coupling -Forged Brass

Coupling Female BI-Hose Tail - Forged Brass

PART No.	DESCRIPTION
126005	BI Female X 38mm Hose Tail Coupling -Forged Brass
126006	BI Female X 45mm Hose Tail Coupling -Forged Brass
126007	BI Female X 50mm Hose Tail Coupling -Forged Brass
126008	BI Female X 65mm Hose Tail Coupling -Forged Brass

Coupling Male BI-Hose Tail - Stainless Steel

PART No.	DESCRIPTION
126009	BI Male 65mm X 38mm Hose Tail Coupling -Stainless Steel
126010	BI Male 65mm X 45mm Hose Tail Coupling -Stainless Steel
126011	BI Male 65mm X 50mm Hose Tail Coupling -Stainless Steel
126012	BI Male 65mm X 65mm Hose Tail Coupling -Stainless Steel

Coupling Female BI-Hose Tail - Stainless Steel

PART No.	DESCRIPTION
126013	BI Female X 38mm Hose Tail Coupling -Stainless Steel
126014	BI Female X 45mm Hose Tail Coupling -Stainless Steel
126015	BI Female X 50mm Hose Tail Coupling -Stainless Steel
126016	BI Female X 65mm Hose Tail Coupling -Stainless Steel

Coupling Male BI-Hose Tail - Aluminium

PART No.	DESCRIPTION
126017	BI Male X 38mm Hose Tail Coupling - Aluminium
126018	BI Male X 45mm Hose Tail Coupling - Aluminium
126019	BI Male X 50mm Hose Tail Coupling - Aluminium
126020	BI Male X 65mm Hose Tail Coupling - Aluminium

Coupling Female BI-Hose Tail - Aluminium

PART No.	DESCRIPTION
126021	BI Female X 38mm Hose Tail Coupling - Aluminium
126022	BI Female X 45mm Hose Tail Coupling - Aluminium
126023	BI Female X 50mm Hose Tail Coupling - Aluminium
126024	BI Female X 65mm Hose Tail Coupling - Aluminium

Approval : BS 336

British Instantaneous (BI) Couplings

The BI Couplings form the easy and quick connection. These couplings have a double ribbed tails manufactured to BS336. The BI Couplings have a locking knob arrangement in the female portion with locks, which helps to make the quick connection. These instantaneous couplings are available in Aluminium alloy, Brass / GM, Stainless Steel.

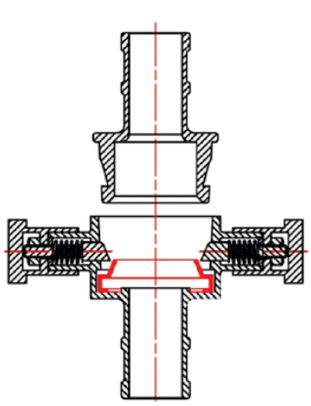

PART No.	DESCRIPTION
126025	BI Coupling Set with 38mm Hose Tail - Aluminium
126026	BI Coupling Set with 45mm Hose Tail - Aluminium
126027	BI Coupling Set with 50mm Hose Tail - Aluminium
126028	BI Coupling Set with 65mm Hose Tail - Aluminium
126029	BI Coupling Set with 38mm Hose Tail - Forged Brass
126030	BI Coupling Set with 45mm Hose Tail - Forged Brass
126031	BI Coupling Set with 50mm Hose Tail - Forged Brass
126032	BI Coupling Set with 65mm Hose Tail - Forged Brass
126033	BI Coupling Set with 38mm Hose Tail - Stainless Steel
126034	BI Coupling Set with 45mm Hose Tail - Stainless Steel
126035	BI Coupling Set with 50mm Hose Tail - Stainless Steel
126036	BI Coupling Set with 65mm Hose Tail - Stainless Steel

Fire Australia Co Pty Ltd.
ABN No. 13165523713
47 Rushdale St. Knoxfield VIC-3180. Tel:(03) 9764 0020, Fax: (03) 9764 0023.
E-mail : sales@fireausco.com.au www.fireausco.com.au

FIRE AUSTRALIA CO

BI Female X BSP Male Adaptor - Forged Brass

PART No.	DESCRIPTION
126037	BI Female X 38mm BSP Male Adaptor - Forged Brass
126038	BI Female X 50mm BSP Male Adaptor - Forged Brass
126039	BI Female X 65mm BSP Male Adaptor - Forged Brass

BI Female X QRT Male Adaptor - Forged Brass

PART No.	DESCRIPTION
126040	BI Female X QRT Male Adaptor - Forged Brass

BI Female X BSP Female Adaptor - Forged Brass

PART No.	DESCRIPTION
126041	BI Female X 38mm BSP Female Adaptor - Forged Brass
126042	BI Female X 50mm BSP Female Adaptor - Forged Brass
126043	BI Female X 65mm BSP Female Adaptor - Forged Brass

BI Female X QRT Female Adaptor - Forged Brass

PART No.	DESCRIPTION
126044	BI Female X QRT Female Adaptor - Forged Brass

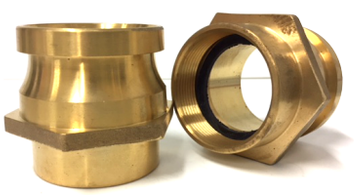

BI Male X BSP Female Adaptor - Forged Brass

PART No.	DESCRIPTION
126048	BI Male X 38mm BSP Female Adaptor - Forged Brass
126049	BI Male X 50mm BSP Female Adaptor - Forged Brass
126050	BI Male X 65mm BSP Female Adaptor - Forged Brass

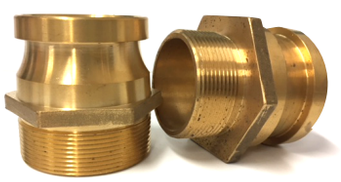

BI Male X BSP Male Adaptor - Forged Brass

PART No.	DESCRIPTION
126045	BI Male X 38mm BSP Male Adaptor - Forged Brass
126046	BI Male X 50mm BSP Male Adaptor - Forged Brass
126047	BI Male X 65mm BSP Male Adaptor - Forged Brass

BI Female X BSP Male Adaptor - Aluminium

PART No.	DESCRIPTION
126051	BI Female X 38mm BSP Male Adaptor -Forged Aluminium
126052	BI Female X 50mm BSP Male Adaptor -Forged Aluminium
126053	BI Female X 65mm BSP Male Adaptor -Forged Aluminium

BI Female X QRT Male Adaptor - Aluminium

PART No.	DESCRIPTION
126054	BI Female X QRT Male Adaptor -Forged Aluminium

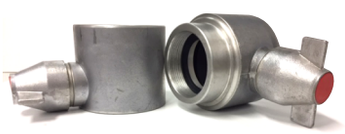

BI Female X BSP Female Adaptor - Aluminium

PART No.	DESCRIPTION
126055	BI Female X 38mm BSP Female Adaptor -Forged Aluminium
126056	BI Female X 50mm BSP Female Adaptor -Forged Aluminium
126057	BI Female X 65mm BSP Female Adaptor -Forged Aluminium

BI Female X QRT Female Adaptor - Forged Aluminium

PART No.	DESCRIPTION
126058	BI Female X QRT Female Adaptor -Forged Aluminium

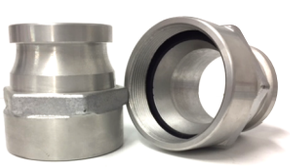

BI Male X BSP Female Adaptor - Aluminium

PART No.	DESCRIPTION
126062	BI Male X 38mm BSP Female Adaptor -Forged Aluminium
126063	BI Male X 50mm BSP Female Adaptor -Forged Aluminium
126064	BI Male X 65mm BSP Female Adaptor -Forged Aluminium

BI Male X BSP Male Adaptor - Aluminium

PART No.	DESCRIPTION
126059	BI Male X 38mm BSP Male Adaptor -Forged Aluminium
126060	BI Male X 50mm BSP Male Adaptor -Forged Aluminium
126061	BI Male X 65mm BSP Male Adaptor -Forged Aluminium

Fire Australia Co Pty Ltd.
ABN No. 13165523713
47 Rushdale St. Knoxfield VIC-3180. Tel:(03) 9764 0020, Fax: (03) 9764 0023.
E-mail : sales@fireausco.com.au www.fireausco.com.au

FIRE AUSTRALIA CO

BI Female X BSP Male Adaptor - Stainless Steel

PART No.	DESCRIPTION
126065	BI Female X 38mm BSP Male Adaptor -Stainless Steel
126066	BI Female X 50mm BSP Male Adaptor -Stainless Steel
126067	BI Female X 65mm BSP Male Adaptor -Stainless Steel

BI Female X BSP Female Adaptor - Stainless Steel

PART No.	DESCRIPTION
126069	BI Female X 38mm BSP Female Adaptor -Stainless Steel
126070	BI Female X 50mm BSP Female Adaptor -Stainless Steel
126071	BI Female X 65mm BSP Female Adaptor -Stainless Steel

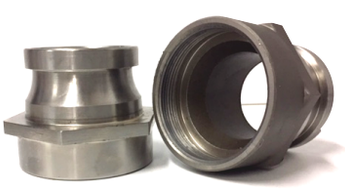

BI Male X BSP Female Adaptor - Stainless Steel

PART No.	DESCRIPTION
126076	BI Male X 38mm BSP Female Adaptor -Stainless Steel
126077	BI Male X 50mm BSP Female Adaptor -Stainless Steel
126078	BI Male X 65mm BSP Female Adaptor -Stainless Steel

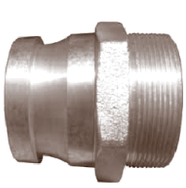

BI Male X BSP Male Adaptor - Stainless Steel

PART No.	DESCRIPTION
126073	BI Male X 38mm BSP Male Adaptor -Stainless Steel
126074	BI Male X 50mm BSP Male Adaptor -Stainless Steel
126075	BI Male X 65mm BSP Male Adaptor -Stainless Steel

BI-Male X BSP Male Director - Die Cast Aluminium

PART No.	DESCRIPTION
134082	BI-Male X 38mm BSP Male Aluminium Director

Nozzle Female BSP - Die Cast Aluminium

PART No.	DESCRIPTION
134090	Nozzle 38mm BSP Female Aluminium

B. I. (BRITISH INSTANTANEOUS) FITTINGS

Cap BI Female - Forged Brass

PART No.	DESCRIPTION
126080	BI Female Cap - Forged Brass

Plug BI Male - Forged Brass

PART No.	DESCRIPTION
126083	BI Male Plug - Forged Brass

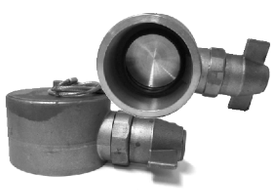

Cap BI Female - Aluminium

PART No.	DESCRIPTION
126079	BI Female Cap - Aluminium

Plug BI Male - Aluminium

PART No.	DESCRIPTION
126082	BI Male Plug - Aluminium

Plug BI Male - Plastic

PART No.	DESCRIPTION
126084	BI Male Plug - Plastic

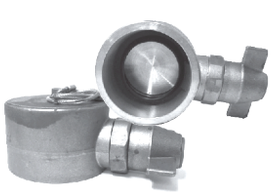

Cap BI Female - Stainless Steel

PART No.	DESCRIPTION
126081	BI Female Cap - Stainless Steel

Plug BI Male - Stainless Steel

PART No.	DESCRIPTION
126085	BI Male Plug - Stainless Steel

Washer for BI Female - Rubber

PART No.	DESCRIPTION
126086	BI Female Rubber Washer

Fire Australia Co Pty Ltd.
ABN No. 13165523713
47 Rushdale St. Knoxfield VIC-3180. Tel:(03) 9764 0020, Fax: (03) 9764 0023.
E-mail : sales@fireausco.com.au www.fireausco.com.au

Director Male BI Male BSP - Brass

PART No.	DESCRIPTION
134082	BI Male X 38 BSP Male Brass Director
134083	BI Male X 50 BSP Male Brass Director

Director Male BI Male BSP - Aluminium

PART No.	DESCRIPTION
134084	65mm X 38mm Aluminium Director Male BI -Male BSP
134085	CFA Female X 38 BSP Male Alcminium Director

Director Male BI Male BSP - Plastic

PART No.	DESCRIPTION
134086	BI Male X 38 BSP Male Plastic Director
134087	CFA Female X 38 BSP Male Plastic Director
134088	MFB Female X 38 BSP Male Plastic Director

Nozzles Female BSP

PART No.	DESCRIPTION
134089	38mm Brass Nozzle Female BSP
134090	38mm Aluminium Nozzle Female BSP
134091	38mm Plastic Nozzle Female BSP

Approval : Listed

Forestry Couplings & Adaptors - Forged Aluminium (BP 6200kPa)

PART No.	DESCRIPTION
127001	Forestry/Quick Connect/External Lugged Hose Coupling 38mm X 38mm **Forged** Aluminium **ULC APPROVED** Including Brass Expansion Ring

PART No.	DESCRIPTION
127002	Forestry/Quick Connect/External Lugged Hose Coupling 38mm X 25mm **Forged** Aluminium **ULC APPROVED** Including Brass Expansion Ring

PART No.	DESCRIPTION
127003	Forestry/Quick Connect/External Lugged Adaptor 38mm X 38mm BSP Male **Forged** Aluminium **ULC APPROVED**
127004	Forestry/Quick Connect/External Lugged Adaptor 38mm X 32mm BSP Male **Forged** Aluminium **ULC APPROVED**
127005	Forestry/Quick Connect/External Lugged Adaptor 38mm X 25mm BSP Male **Forged** Aluminium **ULC APPROVED**
127006	Forestry/Quick Connect/External Lugged Adaptor 38mm X 25mm NPSH Male **Forged** Aluminium **ULC APPROVED**
127007	Forestry/Quick Connect Adaptor 38mm X 20mm BSP Male **Forged** Aluminium **ULC APPROVED**

Fire Australia Co Pty Ltd.
ABN No. 13165523713
47 Rushdale St. Knoxfield VIC-3180. Tel:(03) 9764 0020, Fax: (03) 9764 0023.
E-mail : sales@fireausco.com.au www.fireausco.com.au

FIRE AUSTRALIA CO

Approval : ULC

Forestry Couplings & Adaptors - Forged Aluminium

PART No.	DESCRIPTION
127008	Forestry/Quick Connect/External Lugged Adaptor 38mm X 38mm BSP Female **Forged** Aluminium **ULC APPROVED**
127009	Forestry/Quick Connect/External Lugged Adaptor 38mm X 32mm BSP Female **Forged** Aluminium **ULC APPROVED**
127010	Forestry/Quick Connect/External Lugged Adaptor 38mm X 25mm BSP Female **Forged** Aluminium **ULC APPROVED**
127011	Forestry/Quick Connect/External Lugged Adaptor 38mm X 25mm NPSH Female **Forged** Aluminium **ULC APPROVED**
127012	Forestry/Quick Connect Adaptor 38mm X 20mm BSP Female **Forged** Aluminium **ULC APPROVED**

PART No.	DESCRIPTION
127013	Forestry/Quick Connect/External Lugged Cap 38mm - Forged Aluminium **ULC APPROVED**

PART No.	DESCRIPTION
127014	38mm Hose Brass Forestry Expansion Ring
127015	25mm Hose Brass Forestry Expansion Ring

PART No.	DESCRIPTION
127016	38mm Hose Copper Forestry Expansion Ring
127017	25mm Hose Copper Forestry Expansion Ring

PART No.	DESCRIPTION
127018	38mm Rubber Forestry Face Washer

PART No.	DESCRIPTION
127019	38mm X 25mm Backup Washer

Approval : ULC

Forestry Couplings & Adaptors
- Forged Aluminium - Black Anodized (BP 6200kPa)

PART No.	DESCRIPTION
127029	Forestry/Quick Connect/External Lugged Hose Coupling 38mm X 38mm **Forged** Aluminium-Black Anodized **ULC APPROVED** Including Brass Expansion Ring

PART No.	DESCRIPTION
127030	Forestry/Quick Connect/External Lugged Hose Coupling 38mm X 25mm **Forged** Aluminium-Black Anodized **ULC APPROVED** Including Brass Expansion Ring

PART No.	DESCRIPTION
127020	Forestry/Quick Connect/External Lugged Adaptor 38mm X 38mm BSP Male **Forged** Aluminium-Black Anodized **ULC APPROVED**
127021	Forestry/Quick Connect/External Lugged Adaptor 38mm X 32mm BSP Male **Forged** Aluminium-Black Anodized **ULC APPROVED**
127022	Forestry/Quick Connect/External Lugged Adaptor 38mm X 25mm BSP Male **Forged** Aluminium-Black Anodized **ULC APPROVED**
127023	Forestry/Quick Connect/External Lugged Adaptor 38mm X 20mm BSP Male **Forged** Aluminium-Black Anodized **ULC APPROVED**

PART No.	DESCRIPTION
127024	Forestry/Quick Connect/External Lugged Adaptor 38mm X 38mm BSP Female **Forged** Aluminium-Black Anodized **ULC APPROVED**
127025	Forestry/Quick Connect/External Lugged Adaptor 38mm X 32mm BSP Female **Forged** Aluminium-Black Anodized **ULC APPROVED**
127026	Forestry/Quick Connect/External Lugged Adaptor 38mm X 25mm BSP Female **Forged** Aluminium-Black Anodized **ULC APPROVED**
127027	Forestry/Quick Connect/External Lugged Adaptor 38mm X 20mm BSP Female **Forged** Aluminium-Black Anodized **ULC APPROVED**

PART No.	DESCRIPTION
127028	Forestry/Quick Connect/External Lugged Cap 38mm - Forged Aluminium -Black Anodized **ULC APPROVED**

Fire Australia Co Pty Ltd.
ABN No. 13165523713
47 Rushdale St. Knoxfield VIC-3180. Tel:(03) 9764 0020, Fax: (03) 9764 0023.
E-mail : sales@fireausco.com.au www.fireausco.com.au

FIRE AUSTRALIA CO

Coventry Adaptors Suction Point

PART No.	DESCRIPTION
140014	125mm Aluminium Coventry Adaptor Suction Point
140015	125mm Brass Coventry Adaptor Suction Point
140016	6" R/G X 5" Coventry Suction Addaptors Aluminium

Tank Caps

PART No.	DESCRIPTION
140017	125mm Aluminium Tank Cap S/S Wire Strainer
140016	125mm Aluminium Tank Cap Without Wire Strainer

Suction Strainer - Aluminium

PART No.	DESCRIPTION
140019	65mm Aluminium Suction Strainer Male BSP
140020	80mm Aluminium Suction Strainer Male BSP
140021	100mm Aluminium Suction Strainer Male BSP
140022	125mm Aluminium Suction Strainer Male BSP
140023	150mm Aluminium Suction Strainer Male BSP

Suction Strainers Can Be Provided With Storz Fittings

Wire Strainer - Stainless Steel

PART No.	DESCRIPTION
140030	2" S/steel Wire Strainer
140031	2.5" S/steel Wire Strainer
140032	3" S/steel Wire Strainer
140033	4" S/steel Wire Strainer
140034	5" S/steel Wire Strainer
140035	6" S/steel Wire Strainer

Basket Strainers

PART No.	DESCRIPTION
140036	Laquered Caine Basket Suit Vertical Strainers Suite 65mm-150mm
140037	Rexine Skirts For Basket Strainer

Fire Australia Co Pty Ltd.
ABN No. 13165523713
47 Rushdale St. Knoxfield VIC-3180. Tel:(03) 9764 0020, Fax: (03) 9764 0023.
E-mail : sales@fireausco.com.au www.fireausco.com.au

HOSES & HOSE FITTINGS

- BAUER STYLE COUPLINGS 249 - 250
- BRASS WARE HOSE BARB & TAILS 251 - 256
- CAMLOCKS 245 - 248
- CLEAR VINYL HOSE 264
- COMBINATION (KING) NIPPLES 265
- FLEXIBLE BORE HOSES 262 - 265
- HOSE JOINERS 265
- LAY FLAT HOSES 258 - 261
- NOZZLES 257
- SUCTION HOSES 265

Type A Camlocks - Female BSP X Male Camlock

PART No.			DESCRIPTION
ALUMINIUM	STAINLESS STEEL	POLYPROPYLENE	
147001	147011	NA	15mm Camlocks Type A
147002	147012	147021	20mm Camlocks Type A
147003	147013	147022	25mm Camlocks Type A
147004	147014	147023	32mm Camlocks Type A
147005	147015	147024	40mm Camlocks Type A
147006	147016	147025	50mm Camlocks Type A
147007	147017	NA	65mm Camlocks Type A
147008	147018	147026	80mm Camlocks Type A
147009	147019	147027	100mm Camlocks Type A
147010	147020	NA	150mm Camlocks Type A

Type B Camlocks - Male BSP X Female Camlock

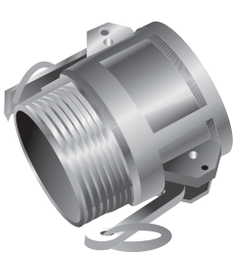

PART No.			DESCRIPTION
ALUMINIUM	STAINLESS STEEL	POLYPROPYLENE	
147028	147038	NA	15mm Camlocks Type B
147029	147039	147048	20mm Camlocks Type B
147030	147040	147049	25mm Camlocks Type B
147031	147041	147050	32mm Camlocks Type B
147032	147042	147051	40mm Camlocks Type B
147033	147043	147052	50mm Camlocks Type B
147034	147044	NA	65mm Camlocks Type B
147035	147045	147053	80mm Camlocks Type B
147036	147046	147054	100mm Camlocks Type B
147037	147047	NA	150mm Camlocks Type B

Type C Camlocks - Female Camlock X Hose Tail

PART No.			DESCRIPTION
ALUMINIUM	STAINLESS STEEL	POLYPROPYLENE	
147055	147065	NA	15mm Camlocks Type C
147056	147066	147075	20mm Camlocks Type C
147057	147067	147076	25mm Camlocks Type C
147058	147068	147077	32mm Camlocks Type C
147059	147069	147078	40mm Camlocks Type C
147060	147070	147079	50mm Camlocks Type C
147061	147071	NA	65mm Camlocks Type C
147062	147072	147080	80mm Camlocks Type C
147063	147073	147081	100mm Camlocks Type C
147064	147074	NA	150mm Camlocks Type C

Type D Camlocks - Female BSP X Female Camlock

PART No.			DESCRIPTION
ALUMINIUM	STAINLESS STEEL	POLYPROPYLENE	
147082	147092	NA	15mm Camlocks Type D
147083	147093	147102	20mm Camlocks Type D
147084	147094	147103	25mm Camlocks Type D
147085	147095	147104	32mm Camlocks Type D
147086	147096	147105	40mm Camlocks Type D
147087	147097	147106	50mm Camlocks Type D
147088	147098	NA	65mm Camlocks Type D
147089	147099	147107	80mm Camlocks Type D
147090	147100	147108	100mm Camlocks Type D
147091	147101	NA	150mm Camlocks Type D

Fire Australia Co Pty Ltd.
ABN No. 13165523713
47 Rushdale St. Knoxfield VIC-3180. Tel:(03) 9764 0020, Fax: (03) 9764 0023.
E-mail : sales@fireausco.com.au www.fireausco.com.au

Type E Camlocks - Male Camlock X Hose Tail

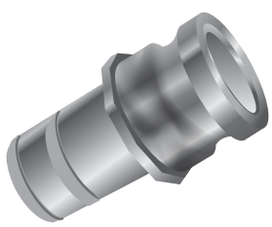

PART No.			DESCRIPTION
ALUMINIUM	STAINLESS STEEL	POLYPROPYLENE	
147109	147119	NA	15mm Camlocks Type E
147110	147120	147129	20mm Camlocks Type E
147111	147121	147130	25mm Camlocks Type E
147112	147122	147131	32mm Camlocks Type E
147113	147123	147132	40mm Camlocks Type E
147114	147124	147133	50mm Camlocks Type E
147115	147125	NA	65mm Camlocks Type E
147116	147126	147134	80mm Camlocks Type E
147117	147127	147135	100mm Camlocks Type E
147118	147128	NA	150mm Camlocks Type E

Type F Camlocks - Male BSP X Male Camlock

PART No.			DESCRIPTION
ALUMINIUM	STAINLESS STEEL	POLYPROPYLENE	
147136	147146	NA	15mm Camlocks Type F
147137	147147	147156	20mm Camlocks Type F
147138	147148	147157	25mm Camlocks Type F
147139	147149	147158	32mm Camlocks Type F
147140	147150	147159	40mm Camlocks Type F
147141	147151	147160	50mm Camlocks Type F
147142	147152	NA	65mm Camlocks Type F
147143	147153	147161	80mm Camlocks Type F
147144	147154	147162	100mm Camlocks Type F
147145	147155	NA	150mm Camlocks Type F

Type DC Camlocks - Dust Caps

PART No.			DESCRIPTION
ALUMINIUM	STAINLESS STEEL	POLYPROPYLENE	
147163	147173	NA	15mm Camlocks Type DC
147164	147174	147183	20mm Camlocks Type DC
147165	147175	147184	25mm Camlocks Type DC
147166	147176	147185	32mm Camlocks Type DC
147167	147177	147186	40mm Camlocks Type DC
147168	147178	147187	50mm Camlocks Type DC
147169	147179	NA	65mm Camlocks Type DC
147170	147180	147188	80mm Camlocks Type DC
147171	147181	147189	100mm Camlocks Type DC
147172	147182	NA	150mm Camlocks Type DC

Type DP Camlocks - Dust Plugs

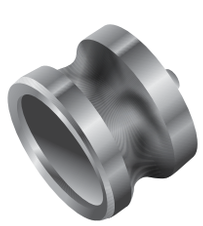

PART No.			DESCRIPTION
ALUMINIUM	STAINLESS STEEL	POLYPROPYLENE	
147190	147200	NA	15mm Camlocks Type DP
147191	147201	147210	20mm Camlocks Type DP
147192	147202	147211	25mm Camlocks Type DP
147193	147203	147212	32mm Camlocks Type DP
147194	147204	147213	40mm Camlocks Type DP
147195	147205	147214	50mm Camlocks Type DP
147196	147206	NA	65mm Camlocks Type DP
147197	147207	147215	80mm Camlocks Type DP
147198	147208	147216	100mm Camlocks Type DP
147199	147209	NA	150mm Camlocks Type DP

Fire Australia Co Pty Ltd.
ABN No. 13165523713
47 Rushdale St. Knoxfield VIC-3180. Tel:(03) 9764 0020, Fax: (03) 9764 0023.
E-mail : sales@fireausco.com.au www.fireausco.com.au

FIRE AUSTRALIA CO

Male Coupling Hose Tail

PART NO.	DESCRIPTION
124101	2" Bauer Style - B Male Coupling Hose Tail
124102	3" (76mm Ball) Bauer Style - B Male Coupling Hose Tail
124103	4" Bauer Style - B Male Coupling Hose Tail
124104	5" Bauer Style - B Male Coupling Hose Tail
124105	6" Bauer Style - B Male Coupling Hose Tail
124106	8" Bauer Style - B Male Coupling Hose Tail

Female Coupling Hose Tail

PART NO.	DESCRIPTION
124107	2" Bauer Style - B Female Coupling Hose Tail Including Seal
124108	3" (76mm Ball) Bauer Style - B Female Coupling Hose Tail Including Seal
124109	3" (90mm Ball) Bauer Style - B Female Coupling Hose Tail Including Seal
124110	3.5" (90mm Ball) Bauer Style - B Female Coupling Hose Tail Including Seal
124111	4" Bauer Style - B Female Coupling Hose Tail Including Seal
124112	5" Bauer Style - B Female Coupling Hose Tail Including Seal
124113	6" Bauer Style - B Female Coupling Hose Tail Including Seal
124114	8" Bauer Style - B Female Coupling Hose Tail Including Seal

Coupling Lever Ring

PART NO.	DESCRIPTION
124115	2" Bauer Style - B Coupling Lever Ring
124116	3" Bauer Style - B Coupling Lever Ring(to Suit 76mm Ball)
124117	3" Bauer Style - B Coupling Lever Ring(to Suit 90mm Ball)
124118	4" Bauer Style - B Coupling Lever Ring
124119	5" Bauer Style - B Coupling Lever Ring
124120	6" Bauer Style - B Coupling Lever Ring
124121	8" Bauer Style - B Coupling Lever Ring

Coupling Seal

PART NO.	DESCRIPTION
124122	2" Bauer Style - B Coupling Seal
124123	3" Bauer Style - B Coupling Seal(to Suit 76mm Ball)
124124	3" Bauer Style - B Coupling Seal(to Suit 90mm Ball)
124125	4" Bauer Style - B Coupling Seal
124126	5" Bauer Style - B Coupling Seal
124127	6" Bauer Style - B Coupling Seal
124128	8" Bauer Style - B Coupling Seal

Flanged Male Coupled With Lever

PART NO.	DESCRIPTION
124129	2" Bauer Style - B Flanged Male Coupled With Lever
124130	3" (76mm Ball) Bauer Style - B Flanged Male Coupled With Lever
124131	3" (90mm Ball) Bauer Style - B Flanged Male Coupled With Lever
124132	4" Bauer Style - B Flanged Male Coupled With Lever
124133	6" Bauer Style - B Flanged Male Coupled With Lever
124134	8" Bauer Style - B Flanged Male Coupled With Lever

Flanged Female

PART NO.	DESCRIPTION
124135	2" Bauer Style - B Flanged Female With Seal
124136	3" (76mm Ball) Bauer Style - B Flanged Female With Seal
124137	3" (90mm Ball) Bauer Style - B Flanged Female With Seal
124138	4" Bauer Style - B Flanged Female With Seal
124139	6" Bauer Style - B Flanged Female With Seal
124140	8" Bauer Style - B Flanged Female With Seal

Male Coupling X BSPT Male

PART NO.	DESCRIPTION
124141	2" Bauer Style - B Male Coupling With 2" BSPT Male
124142	3" (76mm Ball) Bauer Style - B Male Coupling With 3" BSPT Male
124143	3" (90mm Ball) Bauer Style - B Male Coupling With 3" BSPT Male
124144	4" Bauer Style - B Male Coupling With 4" BSPT Male
124145	6" Bauer Style - B Male Coupling With 6" BSPT Male

Female Coupling X BSPT Male

PART NO.	DESCRIPTION
124146	2" Bauer Style - B Female Coupling With 2" BSPT Male With Seal
124147	3" (76mm Ball) Bauer Style - B Female Coupling With 3" BSPT Male With Seal
124148	3" (90mm Ball) Bauer Style - B Female Coupling With 3" BSPT Male With Seal
124149	4" Bauer Style - B Female Coupling With 4" BSPT Male With Seal
124150	6" Bauer Style - B Female Coupling With 6" BSPT Male With Seal

Coupling Cap Female

PART NO.	DESCRIPTION
124151	3" (76mm Ball) Bauer Style - B Cap Female
124152	3" (90mm Ball) Bauer Style - B Cap Female
124153	4" Bauer Style - B Cap Female
124154	6" Bauer Style - B Cap Female
124155	8" Bauer Style - B Cap Female

Fire Australia Co Pty Ltd.
ABN No. 13165523713
47 Rushdale St. Knoxfield VIC-3180. Tel:(03) 9764 0020, Fax: (03) 9764 0023.
E-mail : sales@fireausco.com.au www.fireausco.com.au

FIRE AUSTRALIA CO

Hose Nut & Barbed Tail - Forged Brass

PART NO.	DESCRIPTION
211001	Brass 20mm BSP Female Nut X 15mm Barbed Tail
211002	Brass 20mm BSP Female Nut X 20mm Barbed Tail
211003	Brass 25mm BSP Female Nut X 20mm Barbed Tail
211004	Brass 25mm BSP Female Nut X 25mm Barbed Tail
211005	Brass 32mm BSP Female Nut X 32mm Barbed Tail
211006	Brass 40mm BSP Female Nut X 40mm Barbed Tail
211007	Brass 50mm BSP Female Nut X 50mm Barbed Tail
211008	Brass 65mm BSP Female Nut X 65mm Barbed Tail
211009	Brass 80mm BSP Female Nut X 80mm Barbed Tail
211010	Brass 100mm BSP Female Nut X 100mm Barbed Tail

Hose Barb - Forged Brass

PART NO.	DESCRIPTION
211011	Brass 6mm(1/4) BSP Male X 6mm Barbed Tail
211012	Brass 6mm(1/4) BSP Male X 8mm Barbed Tail
211013	Brass 6mm(1/4) BSP Male X 10mm Barbed Tail
211014	Brass 6mm(1/4) BSP Male X 15mm Barbed Tail
211015	Brass 10mm BSP Male X 6mm Barbed Tail
211016	Brass 10mm BSP Male X 10mm Barbed Tail
211017	Brass 10mm BSP Male X 10mm Barbed Tail
211018	Brass 10mm BSP Male X 15mm Barbed Tail
211019	Brass 15mm BSP Male X 15mm Barbed Tail
211020	Brass 15mm BSP Male X 20mm Barbed Tail
211021	Brass 20mm BSP Male X 15mm Barbed Tail
211022	Brass 20mm BSP Male X 20mm Barbed Tail
211023	Brass 20mm BSP Male X 25mm Barbed Tail
211024	Brass 25mm BSP Male X 20mm Barbed Tail
211025	Brass 25mm BSP Male X 25mm Barbed Tail
211026	Brass 25mm BSP Male X 32mm Barbed Tail
211027	Brass 32mm BSP Male X 32mm Barbed Tail
211028	Brass 40mm BSP Male X 40mm Barbed Tail
211029	Brass 50mm BSP Male X 50mm Barbed Tail
211030	Brass 65mm BSP Male X 65mm Barbed Tail
211031	Brass 80mm BSP Male X 80mm Barbed Tail
211032	Brass 100mm BSP Male X 100mm Barbed Tail

Fire Australia Co Pty Ltd.
ABN No. 13165523713
47 Rushdale St. Knoxfield VIC-3180. Tel:(03) 9764 0020, Fax: (03) 9764 0023.
E-mail : sales@fireausco.com.au www.fireausco.com.au

Hose Barb With Barbed Tail Coupling - Forged Brass

PART NO.	DESCRIPTION
211033	Brass 20mm Barb X 15mmBarbed Tail Coupling
211034	Brass 20mm Barb X 20mmBarbed Tail Coupling
211035	Brass 25mm Barb X 20mmBarbed Tail Coupling
211036	Brass 25mm Barb X 25mmBarbed Tail Coupling
211037	Brass 32mm Barb X 25mmBarbed Tail Coupling
211038	Brass 40mm Barb X 40mmBarbed Tail Coupling
211039	Brass 50mm Barb X 50mmBarbed Tail Coupling
211040	Brass 65mm Barb X 65mmBarbed Tail Coupling
211041	Brass 80mm Barb X 80mmBarbed Tail Coupling
211042	Brass 100mm Barb X 100mm Barbed Tail Coupling

Hose Nut & Ribbed Tail - Forged Brass

PART NO.	DESCRIPTION
211043	Brass 20mm BSP Female Nut X 15mm Ribbed Tail
211044	Brass 20mm BSP Female Nut X 20mm Ribbed Tail
211045	Brass 25mm BSP Female Nut X 20mm Ribbed Tail
211046	Brass 25mm BSP Female Nut X 25mm Ribbed Tail
211047	Brass 32mm BSP Female Nut X 32mm Ribbed Tail
211048	Brass 40mm BSP Female Nut X 40mm Ribbed Tail
211049	Brass 50mm BSP Female Nut X 50mm Ribbed Tail
211050	Brass 65mm BSP Female Nut X 65mm Ribbed Tail
211051	Brass 80mm BSP Female Nut X 80mm Ribbed Tail
211052	Brass 100mm BSP Female Nut X 100mm Ribbed Tail

Hose Barb With Ribbed Tail Coupling - Forged Brass

PART NO.	DESCRIPTION
211053	Brass 20mm Barb X 15mm Ribbed Tail Coupling
211054	Brass 20mm Barb X 20mm Ribbed Tail Coupling
211055	Brass 25mm Barb X 20mm Ribbed Tail Coupling
211056	Brass 25mm Barb X 25mm Ribbed Tail Coupling
211057	Brass 32mm Barb X 25mm Ribbed Tail Coupling
211058	Brass 40mm Barb X 40mm Ribbed Tail Coupling
211059	Brass 50mm Barb X 50mm Ribbed Tail Coupling
211060	Brass 65mm Barb X 65mm Ribbed Tail Coupling
211061	Brass 80mm Barb X 80mm Ribbed Tail Coupling
211062	Brass 100mm Barb X 100mm Ribbed Tail Coupling

Fire Australia Co Pty Ltd.
ABN No. 13165523713
47 Rushdale St. Knoxfield VIC-3180. Tel:(03) 9764 0020, Fax: (03) 9764 0023.
E-mail : sales@fireausco.com.au www.fireausco.com.au

FIRE AUSTRALIA CO

Bush - Forged Brass

PART NO.	DESCRIPTION
211068	6mm X 3mm Brass Bush
211069	10mm X 3mm Brass Bush
211070	10mm X 6mm Brass Bush
211071	15mm X 3mm Brass Bush
211072	15mm X 6mm Brass Bush
211073	15mm X 10mm Brass Bush
211074	20mm X 3mm Brass Bush
211075	20mm X 6mm Brass Bush
211076	20mm X 15mm Brass Bush
211077	25mm X 15mm Brass Bush
211078	25mm X 20mm Brass Bush
211079	32mm X 15mm Brass Bush
211080	32mm X 20mm Brass Bush
211081	32mm X 25mm Brass Bush
211082	40mm X 20mm Brass Bush
211083	40mm X 25mm Brass Bush
211084	40mm X 32mm Brass Bush
211085	50mm X 20mm Brass Bush
211086	50mm X 25mm Brass Bush
211087	50mm X 32mm Brass Bush
211088	50mm X 40mm Brass Bush
211089	80mm X 65mm Brass Bush
211090	100mm X 50mm Brass Bush
211091	100mm X 65mm Brass Bush
211092	100mm X 80mm Brass Bush

M & F Adaptor - Brass

PART NO.	DESCRIPTION
211063	6mm M&F Brass Adaptor
211064	10mm M&F Brass Adaptor
211065	15mm M&F Brass Adaptor
211066	20mm M&F Brass Adaptor
211067	25mm M&F Brass Adaptor

Hex Cap - Brass

PART NO.	DESCRIPTION
211093	15mm Brass Hex Cap
211094	20mm Brass Hex Cap
211095	25mm Brass Hex Cap
211096	32mm Brass Hex Cap
211097	40mm Brass Hex Cap
211098	50mm Brass Hex Cap

F/F Elbow - Brass

PART NO.	DESCRIPTION
211099	3mm Brass F/F Elbow
211100	6mm Brass F/F Elbow
211101	10mm Brass F/F Elbow
211102	15mm Brass F/F Elbow
211103	20mm Brass F/F Elbow
211104	25mm Brass F/F Elbow
211105	32mm Brass F/F Elbow
211106	40mm Brass F/F Elbow
211107	50mm Brass F/F Elbow

M/F Elbow - Brass

PART NO.	DESCRIPTION
211108	3mm Brass M/F Elbow
211109	6mm Brass M/F Elbow
211110	10mm Brass M/F Elbow
211111	15mm Brass M/F Elbow
211112	20mm Brass M/F Elbow
211113	25mm Brass M/F Elbow
211114	32mm Brass M/F Elbow
211115	40mm Brass M/F Elbow
211116	50mm Brass M/F Elbow

Lock Nut - Brass

PART NO.	DESCRIPTION
211117	3mm Brass Lock Nut
211118	6mm Brass Lock Nut
211119	10mm Brass Lock Nut
211120	15mm Brass Lock Nut
211121	20mm Brass Lock Nut
211122	25mm Brass Lock Nut
211123	32mm Brass Lock Nut
211124	40mm Brass Lock Nut
211125	50mm Brass Lock Nut

Hex Nipple BSPT - Brass

PART NO.	DESCRIPTION
211126	3mm Brass Hex Nipple-BSPT
211127	6mm Brass Hex Nipple-BSPT
211128	10mm Brass Hex Nipple-BSPT
211129	15mm Brass Hex Nipple-BSPT
211130	20mm Brass Hex Nipple-BSPT
211131	25mm Brass Hex Nipple-BSPT
211132	32mm Brass Hex Nipple-BSPT
211133	40mm Brass Hex Nipple-BSPT
211134	50mm Brass Hex Nipple-BSPT
211135	65mm Brass Hex Nipple-BSPT
211136	80mm Brass Hex Nipple-BSPT
211137	100mm Brass Hex Nipple-BSPT

All Thread BSPP Nipple - Brass

PART NO.	DESCRIPTION
211138	15mm X 150mm Brass Allthread Nipple-BSPP
211139	15mm X 300mm Brass Allthread Nipple-BSPP
211140	20mm X 150mm Brass Allthread Nipple-BSPP
211141	20mm X 300mm Brass Allthread Nipple-BSPP
211142	25mm X 150mm Brass Allthread Nipple-BSPP
211143	32mm X 150mm Brass Allthread Nipple-BSPP

Fire Australia Co Pty Ltd.
ABN No. 13165523713
47 Rushdale St. Knoxfield VIC-3180. Tel:(03) 9764 0020, Fax: (03) 9764 0023.
E-mail : sales@fireausco.com.au www.fireausco.com.au

FIRE AUSTRALIA CO

Hex Reducing Nipple - Brass

PART NO.	DESCRIPTION
211144	6mm X 3mm Brass Hex Reducing Nipple-BSPT
211145	10mm X 3mm Brass Hex Reducing Nipple-BSPT
211146	10mm X 6mm Brass Hex Reducing Nipple-BSPT
211147	15mm X 6mm Brass Hex Reducing Nipple-BSPT
211148	15mm X 10mm Brass Hex Reducing Nipple-BSPT
211149	20mm X 15mm Brass Hex Reducing Nipple-BSPT
211150	25mm X 15mm Brass Hex Reducing Nipple-BSPT
211151	25mm X 20mm Brass Hex Reducing Nipple-BSPT
211152	32mm X 20mm Brass Hex Reducing Nipple-BSPT
211153	32mm X 25mm Brass Hex Reducing Nipple-BSPT
211154	40mm X 20mm Brass Hex Reducing Nipple-BSPT
211155	40mm X 25mm Brass Hex Reducing Nipple-BSPT
211156	40mm X 32mm Brass Hex Reducing Nipple-BSPT
211157	50mm X 15mm Brass Hex Reducing Nipple-BSPT
211158	50mm X 20mm Brass Hex Reducing Nipple-BSPT
211159	50mm X 25mm Brass Hex Reducing Nipple-BSPT
211160	50mm X 32mm Brass Hex Reducing Nipple-BSPT
211161	50mm X 40mm Brass Hex Reducing Nipple-BSPT
211162	65mm X 50mm Brass Hex Reducing Nipple-BSPT
211163	80mm X 50mm Brass Hex Reducing Nipple-BSPT
211164	80mm X 65mm Brass Hex Reducing Nipple-BSPT
211165	100mm X 50mm Brass Hex Reducing Nipple-BSPT
211166	100mm X 65mm Brass Hex Reducing Nipple-BSPT
211167	100mm X 80mm Brass Hex Reducing Nipple-BSPT

Hex Plug - Brass

PART NO.	DESCRIPTION
211168	3mm Brass Hex Plug
211169	6mm Brass Hex Plug
211170	10mm Brass Hex Plug
211171	15mm Brass Hex Plug
211172	20mm Brass Hex Plug
211173	25mm Brass Hex Plug
211174	32mm Brass Hex Plug
211175	40mm Brass Hex Plug
211176	50mm Brass Hex Plug
211177	65mm Brass Hex Plug
211178	80mm Brass Hex Plug
211179	100mm Brass Hex Plug

Hex Socket - Brass

PART NO.	DESCRIPTION
211180	3mm Brass Hex Socket
211181	6mm Brass Hex Socket
211182	10mm Brass Hex Socket
211183	15mm Brass Hex Socket
211184	20mm Brass Hex Socket
211185	25mm Brass Hex Socket
211186	32mm Brass Hex Socket
211187	40mm Brass Hex Socket
211188	50mm Brass Hex Socket

Reducing Socket - Brass

PART NO.	DESCRIPTION
211189	20mm X 15mm Brass Reducing Socket
211190	25mm X 20mm Brass Reducing Socket

Female Tee - Brass

PART NO.	DESCRIPTION
211191	3mm Brass Female Tee
211192	6mm Brass Female Tee
211193	10mm Brass Female Tee
211194	15mm Brass Female Tee
211195	20mm Brass Female Tee
211196	25mm Brass Female Tee
211197	32mm Brass Female Tee
211198	40mm Brass Female Tee
211199	50mm Brass Female Tee
211200	65mm Brass Female Tee

F/F Barrel Union - Brass

PART NO.	DESCRIPTION
211201	6mm Brass Female / Female Barrel Union
211202	10mm Brass Female / Female Barrel Union
211203	15mm Brass Female / Female Barrel Union
211204	20mm Brass Female / Female Barrel Union
211205	25mm Brass Female / Female Barrel Union
211206	32mm Brass Female / Female Barrel Union
211207	40mm Brass Female / Female Barrel Union
211208	50mm Brass Female / Female Barrel Union

M/F Barrel Union - Brass

PART NO.	DESCRIPTION
211209	6mm Brass Male / Female Barrel Union
211210	10mm Brass Male / Female Barrel Union
211211	15mm Brass Male / Female Barrel Union
211212	20mm Brass Male / Female Barrel Union
211213	25mm Brass Male / Female Barrel Union
211214	32mm Brass Male / Female Barrel Union
211215	40mm Brass Male / Female Barrel Union
211216	50mm Brass Male / Female Barrel Union

Fire Australia Co Pty Ltd.
ABN No. 13165523713
47 Rushdale St. Knoxfield VIC-3180. Tel:(03) 9764 0020, Fax: (03) 9764 0023.
E-mail : sales@fireausco.com.au www.fireausco.com.au

FIRE AUSTRALIA CO

	PART NO.	DESCRIPTION
	140049	Lever Ball Valve
	140050	Twist Style Brass Nozzle 19mm
	140051	Fog Nozzele 19mm
	140052	Aluminium Fog Nozzle 25mm BSP
	140053	BP-100-19mm(Brass-Plas)
	140054	BP-100-25mm(Brass-Plas)
	140055	BP-150-38mm(Brass-Plas)
	140056	PP-100-19mm(Plas-Plas)
	140057	PP-100-25mm(Plas-Plas)
	140058	PP-150-38mm(Plas-Plas)
	140059	Nozzle Plastic Tail Pieces

FIRE HOSE

EXCALIBUR CAVALIER CENTURION SABRE RAPIER

EXCALIBUR

EXCALIBUR is a popular choice for domestic and commercial fire fighting purposes. It is lightweight very easy to handle and quick to deploy.

EXCALIBUR can be supplied as a ready to go Fire Hose Kit, complete with a shut off nozzle and fitted couplings.

Due to Excalibur's synthetic construction it is mildew resistant and therefore maintenance free. It can be compactly stored when not in use. Excalibur comes with the 12 months full replacement warranty.

EXCALIBUR Hose is manufactured in Australia to AS2792-1992 Standard.

Features

- Can be stored wet
- High burst pressure 3500kpa
- Working pressure 1500kpa
- Mildew resistant for long life
- Many fitting available
- Low friction loss
- Versatile
- Class M

CAVALIER

In environment where chemical or toxic spills may complicate fire fighting efforts, CAVALIER Hose has a protective polyurethane cover on the jacket. It is popular choice for industrial and fire fighting purposes. Apart from being an outstanding fire hose, the CAVALIER is a versatile hose that is also suitable for many high and low pressure liquid transfer jobs. CAVALIER is a sturdy and hardwearing layflat hose that can be easily stored when not in use.

The protective polyurethane jacket can be manufactured in a variety colours, ideal for identification purpose.

Features

- Mildew resistant
- Maintenance free
- Ready for mounting
- Can be stored wet
- High abrasion resistance
- Many fittings available
- Working pressure 1500kpa
- Class M

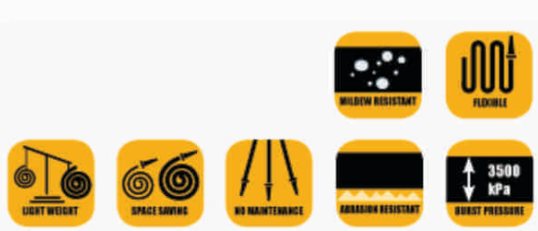

Fire Australia Co Pty Ltd.
ABN No. 13165523713
47 Rushdale St. Knoxfield VIC-3180. Tel:(03) 9764 0020, Fax: (03) 9764 0023.
E-mail : sales@fireausco.com.au www.fireausco.com.au

FIRE AUSTRALIA CO

FIRE HOSE

EXCALIBUR CAVALIER CENTURION SABRE RAPIER

CENTURION

Professional fire brigades need the highest performing layflat fire hose. CENTURION has been approved for use by the NSW Fire Brigade and the CFA, as well as the ADF (Australian Defence Force). For extreme fire fighting conditions, a high pressure (Class H) fire hose is absolutely essential. With CENTURION hose fighting on your side, you have total peace of mind.

The CENTURION layflat fire hose has been constructed with the demands of professional fire fighting units in mind. The internal tightly woven polyester jacket makes this hose suitable for high pressure pumping applications, combined with protection against abrasion and exposure to the elements.

Usually this hose is supplied in 30m lengths but longer lengths can be made up to 200m. This twill-woven fire hose is made from polyester with a synthetic rubber lining and requires no drying after use.

CENTURION hose is manufactured in Australia to AS2792-1992 and carries an approval of the Australian Army DEF 5195A 1992 standard.

Features

- Reliability
- High burst pressure 3500kpa
- Working pressure 1500kpa
- Mildew resistant
- Many fitting available
- Light and quick to deploy
- Easy storage
- Can be stored wet
- Class H

SABRE

SABRE is Crusader Hose's premium percolating fire hose. This is a layflat percolating fire hose which allows precision engineered seepage of water under pressure through the hose fabric jacket. This percolating feature forms a water barrier on the hose jacket which protects the hose against the effects of heat and glowing embers.

Sabre fire hose can be manufactured from 25mm to 102mm diameter.

Its lightweight yet sturdy construction enables fire fighters to take this hose into dense bushfires, transporting the hose in backpacks. The hose is fully synthetic thus making it mildew resistant. As a result this hose is maintenance free so no drying is required after use.

Depending on the types of fires, you can choose from 3 grades of percolation - low, medium and high.

The SABRE Hose has the Australian Standard AS2792-1992.

Features

- Mildew resistant
- Maintenance free
- Ready for mounting
- Can be stored wet
- Versatile
- Other Fitting available
- Working pressure 1500kpa
- Class M

Fire Australia Co Pty Ltd.
ABN No. 13165523713
47 Rushdale St. Knoxfield VIC-3180. Tel:(03) 9764 0020, Fax: (03) 9764 0023.
E-mail : sales@fireausco.com.au www.fireausco.com.au

FIRE HOSE

EXCALIBUR CAVALIER CENTURION SABRE RAPIER

RAPIER

RAPIER is a popular choice for both fire brigades and industrial plant fire protection. It is a high pressure Type 3 fire hose, which is manufactured with an extruded synthetic rubber cover. This extruded cover protects the hose against abrasion and chemical damage.

The interior lining and exterior coating on the fire hose jacket is made from PVC nitrile. This extruded cover is highly chemical and abrasion resistant.
In addition to the practical protection afforded by the polymer cover, the layflat hose is protected from being stained by oils and dirt.

The RAPIER hose has the Australian Defence Force DEF 5195A Standard of approval.

Features

- Reliability
- High burst pressure 5250kPa
- Working pressure 2100kPa
- Mildew resistant for long life
- Other fittings available
- Light and quick to deploy
- Class H

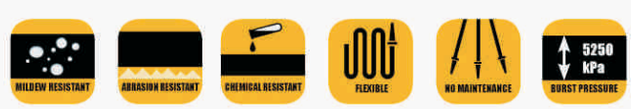

Hose Type	Excalibur	Cavalier	Centurion	Sabre	Rapier
Burst Pressure	Low Medium	Medium High	High	Medium High	Medium High
Diameter	25mm - 102mm	25mm - 102mm	25mm - 102mm	25mm - 102mm	25mm - 102mm
Cover material	Polyester	PU Coating	Polyester	Percolating	PVC
Colour	White	Red/Any	White	White	Red/Any

HOSE STRANGLER

Product Code	Product Description
136325	ALLUMINIUM HOSE STRANGLER

The Papillon Aluminium Hose Stranglers are very much user friendly. They are conveniently designed to interrupt the flow momentarily to alter hose lays, changing branches, nozzles or nozzle tips etc, all these activities can be done without shutting down the pump or water source. The synthetic soft covering is provided to prevent the damage to the hose while this Hose Strangler is in use.

Fire Australia Co Pty Ltd.
ABN No. 13165523713
47 Rushdale St. Knoxfield VIC-3180. Tel:(03) 9764 0020, Fax: (03) 9764 0023.
E-mail : sales@fireausco.com.au www.fireausco.com.au

FIRE AUSTRALIA CO

Lay Flat Excalibur Hose

PART NO.	DESCRIPTION
136000	25mm X 30m Excalibur Hose
136001	38mm X 30m Excalibur Hose
136002	50mm X 30m Excalibur Hose
136003	65mm X 30m Excalibur Hose

Lay Flat Cavalier Hose

PART NO.	DESCRIPTION
136065	25mm X 30m Cavalier Hose
136066	38mm X 30m Cavalier Hose
136067	50mm X 30m Cavalier Hose
136068	65mm X 30m Cavalier Hose

Lay Flat Centurion Hose

PART NO.	DESCRIPTION
136130	25mm X 30m Centurion Hose
136131	38mm X 30m Centurion Hose
136132	50mm X 30m Centurion Hose
136133	65mm X 30m Centurion Hose

Lay Flat Sabre Hose

PART NO.	DESCRIPTION
136195	25mm X 30m Sabre Hose
136196	38mm X 30m Sabre Hose
136197	50mm X 30m Sabre Hose
136198	65mm X 30m Sabre Hose

Lay Flat Rapier Hose

PART NO.	DESCRIPTION
136260	25mm X 30m Rapier Hose
136261	38mm X 30m Rapier Hose
136262	50mm X 30m Rapier Hose
136263	65mm X 30m Rapier Hose

Note : Hoses can be fitted with any Inlet and Outlet fittings.
Please contact us for further details

Flexibore 100 Hose

PART NO.	DESCRIPTION
136326	1.25" X 100m Flexibore 100 Hose Only
136327	2" X 100m Flexibore 100 Hose Only
136328	1.25" X 100m Flexibore 100 Hose With Coupling
136329	2" X 100m Flexibore 100 Hose With Coupling

Flexibore 250 Hose

PART NO.	DESCRIPTION
136330	1.5" X 250m Flexibore 250 Hose Only
136331	2" X 250m Flexibore 250 Hose Only
136332	3" X 250m Flexibore 250 Hose Only
136333	4" X 250m Flexibore 250 Hose Only
136334	5" X 250m Flexibore 250 Hose Only
136335	6" X 250m Flexibore 250 Hose Only
136336	8" X 250m Flexibore 250 Hose Only
136337	1.5" X 250m Flexibore 250 Hose With Coupling
136338	2" X 250m Flexibore 250 Hose With Coupling
136339	3" X 250m Flexibore 250 Hose With Coupling
136340	4" X 250m Flexibore 250 Hose With Coupling
136341	5" X 250m Flexibore 250 Hose With Coupling
136342	6" X 250m Flexibore 250 Hose With Coupling
136343	8" X 250m Flexibore 250 Hose With Coupling

Irrigation Hose

PART NO.	DESCRIPTION
136344	1.5" X 200m Lay Flat Irrigation Hose Only
136345	2" X 200m Lay Flat Irrigation Hose Only
136346	2.5" X 200m Lay Flat Irrigation Hose Only
136347	3" X 200m Lay Flat Irrigation Hose Only
136348	3.5" X 200m Lay Flat Irrigation Hose Only
136349	4" X 200m Lay Flat Irrigation Hose Only
136350	4.5" X 200m Lay Flat Irrigation Hose Only
136351	5" X 200m Lay Flat Irrigation Hose Only
136352	6" X 200m Lay Flat Irrigation Hose Only
136353	6" HP X 200m Lay Flat Irrigation Hose Only (High Pressure)
136354	8" X 200m Lay Flat Irrigation Hose Only
136355	10" X 200m Lay Flat Irrigation Hose Only
136356	12" X 200m Lay Flat Irrigation Hose Only

Fire Australia Co Pty Ltd.
ABN No. 13165523713
47 Rushdale St. Knoxfield VIC-3180. Tel:(03) 9764 0020, Fax: (03) 9764 0023.
E-mail : sales@fireausco.com.au www.fireausco.com.au

FIRE AUSTRALIA CO

Mine Dewatering Hose

PART NO.	DESCRIPTION
136357	1.5" X 500m Lay Flat Mine Dewatering Hose
136358	2" X 500m Lay Flat Mine Dewatering Hose
136359	2"HP X 500m Lay Flat Mine Dewatering Hose (High Pressure)
136360	2.5" X 500m Lay Flat Mine Dewatering Hose
136361	3" X 500m Lay Flat Mine Dewatering Hose
136362	3"HP X 500m Lay Flat Mine Dewatering Hose (High Pressure)
136363	3.5" X 500m Lay Flat Mine Dewatering Hose
136364	4" X 500m Lay Flat Mine Dewatering Hose
136365	4"HP X 500m Lay Flat Mine Dewatering Hose (High Pressure)
136366	4.5" X 500m Lay Flat Mine Dewatering Hose
136367	5" X 500m Lay Flat Mine Dewatering Hose
136368	6" X 500m Lay Flat Mine Dewatering Hose
136369	6"HP X 500m Lay Flat Mine Dewatering Hose (High Pressure)
136370	8" X 500m Lay Flat Mine Dewatering Hose
136371	8" HP X 500m Lay Flat Mine Dewatering Hose (High Pressure)
136372	10" X 500m Lay Flat Mine Dewatering Hose
136373	12" X 500m Lay Flat Mine Dewatering Hose

Aqualine Potable Water Hose

PART NO.	DESCRIPTION
136374	1.5" X 100m Lay Flat Potable Water Hose
136375	2" X 100m Lay Flat Potable Water Hose
136376	2.5" X 100m Lay Flat Potable Water Hose
136377	3" X 100m Lay Flat Potable Water Hose
136378	3.5" X 100m Lay Flat Potable Water Hose
136379	4" X 100m Lay Flat Potable Water Hose
136380	5" X 100m Lay Flat Potable Water Hose
136381	6" X 100m Lay Flat Potable Water Hose
136382	8" X 100m Lay Flat Potable Water Hose

Petroline Hose

PART NO.	DESCRIPTION
136383	1.5" X 100m Lay Flat Petroline Hose
136384	2" X 100m Lay Flat Petroline Hose
136385	3" X 100m Lay Flat Petroline Hose
136386	4" X 100m Lay Flat Petroline Hose
136387	6" X 100m Lay Flat Petroline Hose

Clear Vinyl Hose

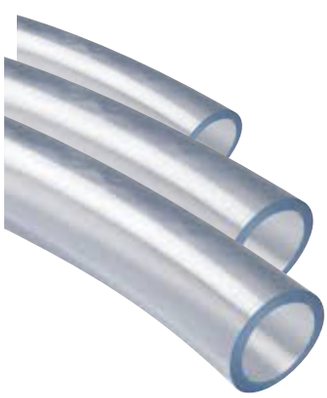

PART No.	DESCRIPTION
136388	5mm OD X 3mm ID-30m Long Clear Vinyl Hose
136389	5mm OD X 3mm ID-50m Long Clear Vinyl Hose
136390	5mm OD X 3mm ID-100m Long Clear Vinyl Hose
136391	6mm OD X 4mm ID-30m Long Clear Vinyl Hose
136392	6mm OD X 4mm ID-50m Long Clear Vinyl Hose
136393	6mm OD X 4mm ID-100m Long Clear Vinyl Hose
136394	8mm OD X 5mm ID-30m Long Clear Vinyl Hose
136395	8mm OD X 5mm ID-50m Long Clear Vinyl Hose
136396	8mm OD X 5mm ID-100m Long Clear Vinyl Hose
136397	9mm OD X 6mm ID-30m Long Clear Vinyl Hose
136398	9mm OD X 6mm ID-50m Long Clear Vinyl Hose
136399	9mm OD X 6mm ID-100m Long Clear Vinyl Hose
136400	11mm OD X 8mm ID-30m Long Clear Vinyl Hose
136401	11mm OD X 8mm ID-50m Long Clear Vinyl Hose
136402	11mm OD X 8mm ID-100m Long Clear Vinyl Hose
136403	13mm OD X 10mm ID-30m Long Clear Vinyl Hose
136404	13mm OD X 10mm ID-50m Long Clear Vinyl Hose
136405	13mm OD X 10mm ID-100m Long Clear Vinyl Hose
136406	15mm OD X 12mm ID-30m Long Clear Vinyl Hose
136407	15mm OD X 12mm ID-50m Long Clear Vinyl Hose
136408	15mm OD X 12mm ID-100m Long Clear Vinyl Hose
136409	19mm OD X 16mm ID-30m Long Clear Vinyl Hose
136410	23mm OD X 19mm ID-30m Long Clear Vinyl Hose
136411	31mm OD X 25mm ID-30m Long Clear Vinyl Hose
136412	38mm OD X 32mm ID-15m Long Clear Vinyl Hose
136413	38mm OD X 32mm ID-30m Long Clear Vinyl Hose
136414	47mm OD X 40mm ID-15m Long Clear Vinyl Hose
136415	47mm OD X 40mm ID-30m Long Clear Vinyl Hose
136416	58mm OD X 50mm ID-15m Long Clear Vinyl Hose
136417	58mm OD X 50mm ID-30m Long Clear Vinyl Hose

Fire Australia Co Pty Ltd.
ABN No. 13165523713
47 Rushdale St. Knoxfield VIC-3180. Tel:(03) 9764 0020, Fax: (03) 9764 0023.
E-mail : sales@fireausco.com.au www.fireausco.com.au

FIRE AUSTRALIA CO

PVC Grey Suction Hose

PART NO.	DESCRIPTION
136418	32mm OD X 25mm ID-20m Long Grey Suction Hose
136419	39mm OD X 32mm ID-20m Long Grey Suction Hose
136420	47mm OD X 38mm ID-20m Long Grey Suction Hose
136421	60mm OD X 51mm ID-20m Long Grey Suction Hose
136422	73mm OD X 63mm ID-20m Long Grey Suction Hose
136423	87mm OD X 76mm ID-20m Long Grey Suction Hose
136424	114mm OD X 102mm ID-20m Long Grey Suction Hose
136425	141mm OD X 125mm ID-20m Long Grey Suction Hose
136426	170mm OD X 150mm ID-20m Long Grey Suction Hose

Water Suction/Delivery Rubber Hose

PART NO.	DESCRIPTION
136427	35mm Od X 25mm ID-20m Longwater Suction/Delivery Hose
136428	42mm Od X 32mm ID-20m Longwater Suction/Delivery Hose
136429	48mm Od X 38mm ID-20m Longwater Suction/Delivery Hose
136430	61mm Od X 51mm ID-20m Longwater Suction/Delivery Hose
136431	75mm Od X 63mm ID-20m Longwater Suction/Delivery Hose
136432	87mm Od X 75mm ID-20m Longwater Suction/Delivery Hose
136433	116mm Od X 102mm ID-20m Longwater Suction/Delivery Hose
136434	172mm Od X 150mm ID-20m Longwater Suction/Delivery Hose

Combination Nipple - Zinc Plated Steel BSP

PART NO.	DESCRIPTION
136435	15mm Combination (king) Nipple -Zinc Plated Steel BSP
136436	20mm Combination (king) Nipple -Zinc Plated Steel BSP
136437	25mm Combination (king) Nipple -Zinc Plated Steel BSP
136438	32mm Combination (king) Nipple -Zinc Plated Steel BSP
136439	40mm Combination (king) Nipple -Zinc Plated Steel BSP
136440	50mm Combination (king) Nipple -Zinc Plated Steel BSP
136441	65mm Combination (king) Nipple -Zinc Plated Steel BSP
136442	80mm Combination (king) Nipple -Zinc Plated Steel BSP
136443	100mm Combination (king) Nipple -Zinc Plated Steel BSP
136444	150mm Combination (king) Nipple -Zinc Plated Steel BSP

Hose Joiner - Zinc Plated Steel

PART NO.	DESCRIPTION
136445	15mm Hose Joiner -Zinc Plated Steel
136446	20mm Hose Joiner -Zinc Plated Steel
136447	25mm Hose Joiner -Zinc Plated Steel
136448	32mm Hose Joiner -Zinc Plated Steel
136449	40mm Hose Joiner -Zinc Plated Steel
136450	50mm Hose Joiner -Zinc Plated Steel
136451	65mm Hose Joiner -Zinc Plated Steel
136452	80mm Hose Joiner -Zinc Plated Steel
136453	100mm Hose Joiner -Zinc Plated Steel
136454	150mm Hose Joiner -Zinc Plated Steel

Fire Australia Co Pty Ltd.
ABN No. 13165523713
47 Rushdale St. Knoxfield VIC-3180. Tel:(03) 9764 0020, Fax: (03) 9764 0023.
E-mail : sales@fireausco.com.au www.fireausco.com.au

MISCELLANEOUS

- BORE CAPS 268
- DENSO TAPE ETC 269
- ISOLATION RUBBER MOUNTS 267
- SEALING TAPES 268-269
- SPRING MOUNTS 267
- VIBRATION ELIMINATOR 267

FIRE AUSTRALIA CO

Vibration Eliminator Table E Flanged

PART No	DESCRIPTION
210167	40mm Table E Vibration Eliminator
210168	50mm Table E Vibration Eliminator
210169	65mm Table E Vibration Eliminator
210170	80mm Table E Vibration Eliminator
210171	100mm Table E Vibration Eliminator
210172	125mm Table E Vibration Eliminator
210173	150mm Table E Vibration Eliminator
210174	200mm Table E Vibration Eliminator
210175	250mm Table E Vibration Eliminator
210176	300mm Table E Vibration Eliminator

Vibration Eliminator Table E / DIN 16 Flanged

PART No	DESCRIPTION
210237	32mm Table E / Din 16 Vibration Eliminator
210238	40mm Table E / Din 16 Vibration Eliminator
210239	50mm Table E / Din 16 Vibration Eliminator
210240	65mm Table E / Din 16 Vibration Eliminator
210241	80mm Table E / Din 16 Vibration Eliminator
210242	100mm Table E / Din 16 Vibration Eliminator
210243	125mm Table E / Din 16 Vibration Eliminator
210244	150mm Table E / Din 16 Vibration Eliminator
210245	200mm Table E / Din 16 Vibration Eliminator

Isolation Rubber Mounts

PART No	DESCRIPTION
140060	Isolation Rubber Mount Small
140061	Isolation Rubber Mount Medium
140062	Isolation Rubber Mount Large

Spring Mounts

PART No	DESCRIPTION
215028	PXL 92 Spring Mount
215029	PXL 93 Spring Mount
215030	PXL 94 Spring Mount
215031	PXL 95 Spring Mount
215032	PXL 96 Spring Mount
215033	PXL 97 Spring Mount
215034	PXL 98 Spring Mount
215035	PXL 99 Spring Mount
215036	PXL 100 Spring Mount
215037	PXL 101 Spring Mount
215038	PXL 102 Spring Mount

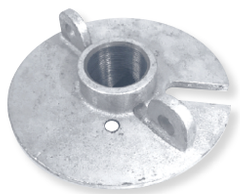

Bore Caps(Single Piece)-Ductile Iron Galvanised

PART No	DESCRIPTION
215025	Bore Cap 40mm BSP Female Ductile Iron
215024	Bore Cap 50mm BSP Female Ductile Iron

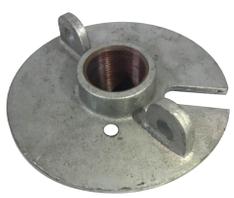

Bore Caps(Single Piece)-Stainless Steel 304

PART No	DESCRIPTION
215027	Bore Cap 40mm BSP Female Stainless Steel 304
215026	Bore Cap 50mm BSP Female Stainless Steel 304

PTFE Thread Sealing Tape - White

PART No	DESCRIPTION
215000	12mm X 0.1mm X 10 Metre Roll

PTFE Thread Sealing Tape - Pink

PART No	DESCRIPTION
215001	12mm X 0.1mm X 10 Metre Roll
215002	12mm X 0.1mm X 30 Metre Roll

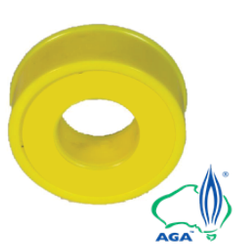

PTFE Thread Sealing Tape - Yellow AGA Approved

PART No	DESCRIPTION
215003	12mm X 0.1mm X 10 Metre Roll
215004	12mm X 0.1mm X 30 Metre Roll

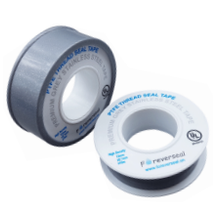

PTFE Thread Sealing Tape - Grey

PART No	DESCRIPTION
215005	12mm X 0.1mm X 10 Metre Roll
215006	12mm X 0.1mm X 30 Metre Roll

Anaerobic Thread Sealant Compound

PART No	DESCRIPTION
215007	100ml Tube
215008	250ml Tube

Fire Australia Co Pty Ltd.
ABN No. 13165523713
47 Rushdale St. Knoxfield VIC-3180. Tel:(03) 9764 0020, Fax: (03) 9764 0023.
E-mail : sales@fireausco.com.au www.fireausco.com.au

FIRE AUSTRALIA CO

Plumbers Hemp

PART No	DESCRIPTION
215009	6 Ply X 26m Plumbers Hemp
215010	8 Ply X 44m Plumbers Hemp

Plumbers Hemping Soap

PART No	DESCRIPTION
215011	Plumbers Hemping Soap

Roll Groove Gasket Lubricant

PART No	DESCRIPTION
215012	Roll Groove Gasket Lubricant Tin-500 gm

Denso Black Over Wrap

PART No	DESCRIPTION
215013	50mm X 30m Denso Black Over Wrap
215014	100mm X 30m Denso Black Over Wrap
215015	150mm X 30m Denso Black Over Wrap

Denso Primer Paste

PART No	DESCRIPTION
215016	Denso Primer Paste Tin -1 Kg
215017	Denso Primer Paste Tin -4 Kg
215018	Denso Primer Paste Drum -20 Kg

Denso Tape

PART No	DESCRIPTION
215019	30mm X 10m Denso Tape
215020	50mm X 10m Denso Tape
215021	100mm X 10m Denso Tape
215022	150mm X 10m Denso Tape
215023	200mm X 10m Denso Tape

SIGNAGES

- 90 & 180 DEG WALL SIGNS 272
- ALUMINIUM ACID ETCHED SIGNS 297
- FIRE EXTINGUISHER SIGNS 271
- FIRE SIGNS-LARGE 284 - 287
- FIRE SIGNS-MEDIUM 273 - 283
- MISCELLANEOUS SIGNS 296
- PIPE MARKERS & CODE TAPES 298 - 299
- TAGS 288 - 295
- VINYL CUT LETTER (STENCIL) 300 - 302

FIRE AUSTRALIA CO

PEXT-XS
(Pic only)
100 x 100mm
S/Adh sticker

PEXT-XXS
100 x 75mm
S/Adh sticker

PEXT-S
150x225mm
Plas -Thin/Thick
S/Adh,Galvanised
Metal Powder coated

PEXT-M
225x340mm
Plas,S/Adh,Reflective
Galvanised Metal
Powder coated

PEXT-L
300x400mm
Plas,Galvanised
Metal Powder
coated

PEXT -XL
600 x 450mm
Plas,Galvanised
Metal Powder
coated

PFB-Plas
150x225mm
Plas, S/Adh,Galvanised
Metal Powder coated

PD26
150x225mm
Plas,S/Adh,
Galvanised Metal
Powder coated
(Available in reflective)

PD27
150 x 225mm
Plas, S/Adh

PD90
150 x 225mm
Plas, S/Adh

PD91
150 x 225mm
Plas, S/Adh

PD92
150x225mm
Plas, S/Adh

PD93
190x190mm
Plas

PD94
150x225mm
Plas,S/Adh

PD95
150x225mm
Plas,S/Adh

PD96
480mm dia Floor
Sign,Polycarbonate

IDENTIFICATION SIGNS

All Identification sings are available in Galvanised metal fully powder coated and printed, Plastic and S/Adhesive sticker. (Please specify the material)

PD6
190x190mm

PD6A
190 x 260mm

PD7
190x190mm

PD7A
190 x 260mm

PD9
190x190mm

PD9A
190x260mm

PD10
190x190mm

PD10A
190x260mm

PD11
190x190mm

(also available in reflective)

PD11A
190x260mm

PD12
190x190mm

PD13
190x190mm

PD14
190x190mm

PD15
190x190mm

PD16
190x190mm

PD17
190x190mm

PD18
190x190mm

PD 19
190x190mm

Fire Australia Co Pty Ltd.
ABN No. 13165523713
47 Rushdale St. Knoxfield VIC-3180. Tel:(03) 9764 0020, Fax: (03) 9764 0023.
E-mail : sales@fireausco.com.au www.fireausco.com.au

90° WALL SIGNS DOUBLE SIDED

90°off Wall Signs are available in thick Plastic.
Galvanised metal powder coated and printed or Reflective Requirements.

PW16
150 x 225mm

PW17
150 x 225mm

PW18
150 x 225mm

PW18A
150 x 225mm

PW19
150 x 225mm
290X200mm
(Also available in Galvanised metal powder coated , and reflective and reflective)

PW19A
150X225mm

PW20
150x 225mm

PW20A
150 x 225mm

PW21
150x225mm

PW22
150x225mm

PW23
150x225mm

PW24
150x225mm
290x200mm
(Also available in Galvanised metal powder coated, and reflective material)

PW25
150x225mm

PW26
150x225mm

PW27
150x225mm

PW28
150x225mm

PW29
150x225mm

PW30
150x225mm

PW30A
150x225mm

PW31
150x225mm

PW32(R)
150x225mm

PW32(L)
150x225mm

PW33
150x225mm

PW34
150x225mm

PW35
150x225mm

PW36
190x150mm

PW37
190x190mm

PW38
200x200mm

PW 18A
150x225mm

PW19A
150x225mm

PW20A
150x225mm

PW24A
150x225mm

180° OFF WALL SIGNS POLYPROPYLENE

180° off Wall Signs are available in polypropylene
Contact us for Galvanized metal powder coated and printed or Reflective Requirements.

PW16-3D

PW18-3D

PW19-3D

PW22-3D

PW24-3D

PW31-3D

Fire Australia Co Pty Ltd.
ABN No. 13165523713
47 Rushdale St. Knoxfield VIC-3180. Tel:(03) 9764 0020, Fax: (03) 9764 0023.
E-mail : sales@fireausco.com.au www.fireausco.com.au

FPA JAS-ANZ ULC LISTED WaterMark UL NEN 3374 FM DIN BS:336

FIRE AUSTRALIA CO

All signs below are available in Plastic, S/Adhesive and Galvanised metal powder coated and printed.

PM13
300x225mm
300x400mm
300x450mm

PM14
300x225mm

PM14 A
300x225mm

PM15
300x225mm

PM16
300x225mm
450x250mm

PM18
300x225mm

PM21
300x225mm

PM21A
300x225mm

PM26
300x225mm
300x400mm

PM27
300x225mm

PM27A
300x225mm

PM28
300x225mm

PM29
300x225mm

PM30
300x225mm

PM30A
300x225mm

PM31
300x225mm

PM32
300x225mm

PM33
300x225mm

PM34
300x225mm

PM34A
200X100mm
300x225mm

PM35
300x225mm

PM36
300x225mm

PM37
300x225mm

PM38
300x225mm

PM39
300x225mm

Fire Australia Co Pty Ltd.
ABN No. 13165523713
47 Rushdale St. Knoxfield VIC-3180. Tel:(03) 9764 0020, Fax: (03) 9764 0023.
E-mail : sales@fireausco.com.au www.fireausco.com.au

FIRE SIGNS - MEDIUM

All signs below are available in Plastic, S/Adhesive and Galvanised metal powder coated and printed.

PM40
300x225mm

PM40A
300x225mm

PM68
300x225mm

PM41
300x225mm

PM42
300x225mm

PM42A
190x190mm

PM42B
195x125mm
(Also Available in Aluminum acid etched paint filled)

PM43
300x225mm
300x100mm

PM44
300x225mm

PM45
300x225mm
100x250mm

PM46
300x225mm

PM46A
300x225mm

PM47
300x225mm

PM47A
300x450mm

PM48
300x225mm

PM49
300x225mm

PM49A
300x225mm

PM50
300x225mm

PM75
300x225mm

PM76
300x225mm

PM77
300x225mm

PM77A
300x225m

PM78
300x225mm

PM79
300x225mm

PM80
300x225mm

Fire Australia Co Pty Ltd.
ABN No. 13165523713
47 Rushdale St. Knoxfield VIC-3180. Tel:(03) 9764 0020, Fax: (03) 9764 0023.
E-mail : sales@fireausco.com.au www.fireausco.com.au

FIRE AUSTRALIA CO

All signs below are available in Plastic, S/Adhesive and Galvanised metal powder coated and printed.

PM81
300x300mm

PM82
495x295mm

PM83
300x225mm

PM84
300x225mm

PM85
300x225mm

PM86
300x225mm

PM87
300x225mm

PM88
300x225mm

PM89
300x225mm

PM90
300x225mm

PM91
300x225mm
300 x 200mm (Reflective)

PM92
300x225mm
400x300mm

PM93
300x225mm
(also available in reflective)

PM94
300x225mm

PM95
300x225mm

PM96
300x225mm

PM97
300x225mm

PM98
300x225mm

PM99
300x225mm

PM100
300x225mm

PM101
300x225mm

PM102
300x225mm

PM105
300x225mm

PM106
300x225mm

PM109
300x100mm

FIRE SIGNS - MEDIUM

All signs below are available in Plastic, S/Adhesive and Galvanised metal powder coated and printed.

PM110
300X225mm

PM111
400x200mm

PM112
300x100mm

PM116
300x100mm

PM116B
300x100mm

PM112A
300x225mm

PM116A
300x100mm

PM116C
300x100mm

PM117
300x225mm
250x90mm

PM118
300x225mm
450x300mm

PM119
355 x 180mm

PM120
300 x 225
(also available in reflective material)

PM121
300x225mm

PM122
300x225mm

PM123
300x225mm

PM124
300x225mm
450X300mm

PM125
300x225mm

PM125A
300x225mm

PM126
300X225mm

PM127
450x200mm

PM128
295x295mm

PM129
300x225mm

PM130
300x225mm

PM131
300x225mm

PM132
300x225mm

PM133
300x225mm

PM134
300x225mm

PM135
300x225mm

Fire Australia Co Pty Ltd.
ABN No. 13165523713
47 Rushdale St. Knoxfield VIC-3180. Tel:(03) 9764 0020, Fax: (03) 9764 0023.
E-mail : sales@fireausco.com.au www.fireausco.com.au

FIRE AUSTRALIA CO

All signs below are available in Plastic, S/Adhesive and Galvanised metal powder coated and printed.

PM136
300x225mm

PM137
300x225mm

PM138
300x225mm

PM139
300x225mm

PM140
410 x 320mm
(Letter Height 80mm)

PM141
140 x 350mm

PM142
300x225mm

PM143
300x225mm

PM144
300x225mm

PM145
300x225mm

PM146
300x225mm

PM147
300x225mm

PM148
300x225mm

PM149
300x225mm

PM150
300x225mm

PM151
300x225mm

PM152
300x225mm

PM153
250x250mm

PM154
300x225mm

PM155
300x225mm
450x300mm

PM156
300x225mm

PM157
300x225mm

PM158
300x225mm

PM159
300x225mm

PM160
300x225mm

FIRE SIGNS - MEDIUM

All signs below are available in Plastic, S/Adhesive and Galvanised metal powder coated and printed.

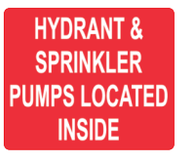

PM161
300x225mm

PM162
300x225mm

PM163
300x225mm

PM164
300x225mm

PM165
300x225mm

PM166
325x300mm

PM167
300x100mm

PM168
300x225mm

PM169
300x225 & 370X370mm
(Alum acid etched paint filled)

PM 169A
300x225mm

PM 169B
300x225mm

PM 169C
300x225mm

PM170
300x225mm

PM171
300x225mm

PM172
300x225mm

PM173
300x225mm

PM174
300x225mm

PM175
300x225mm

PM176
300x225mm

PM177
300x225mm

PM178
300x225mm

PM179
300x225mm

PM180
100x100mm

PM181
300x225mm

PM182
300x225mm

PM183
300x225mm

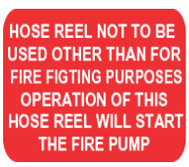

PM184
300x225mm

PM185
300x225mm

PM186
300x225mm

PM187
300x225mm

Fire Australia Co Pty Ltd.
ABN No. 13165523713
47 Rushdale St. Knoxfield VIC-3180. Tel:(03) 9764 0020, Fax: (03) 9764 0023.
E-mail : sales@fireausco.com.au www.fireausco.com.au

FPA JAS-ANZ WaterMark UL LISTED WaterMark UL NEN 3374 FM DIN BS:336

FIRE AUSTRALIA CO

All signs below are available in Plastic, S/Adhesive and Galvanised metal powder coated and printed.

THREE LENGTHS OF HOSE REQUIRED
PM188
300x225mm

3 LENGTHS OF HOSE
4 LENGTHS OF HOSE
PM189
300x100mm

HOSE REEL CONNECTED TO SPRINKLER SYSTEM
PM190
250x100mm

REPORT ALL EXTINGUISHER USAGE TO SUPERVISOR
PM191
300x225mm

LOCAL FIRE ALARM ONLY IN EVENT OF FIRE DIAL 000
PM192
300x225mm

DRENCHER BOOSTER
PM193
300x225mm

DRENCHER PUMP
PM194
300x225mm

DRENCHER PUMP INSIDE
PM195
300x225mm

CFA BOOSTER POINT
PM196
300x225mm

TO BOOST SYSTEM ON PUMP FAILURE CLOSE VALVES 3 AND 4
PM197
300x225mm

WARNING
THIS BOOSTER IS CONNECTED IN SERIES (RELAY) WITH THE FIXED ON-SITE FIRE PUMP WHICH MAY BE RUNNING.
THE GAUGE SHOWS THE TRUE BOOST PRESSURE AT THE FIXED ON-SITE PUMP DISCHARGE
PM1 98
200x220mm
600x450mm

WARNING
PRESSURE MAY BE EXCESSIVE
OPEN HYDRANT WITH CAUTION
PM199
300x225mm

COMBINED HYDRANT & SPRINKLER BOOSTER
PM200
300x225mm

COMBINED SPRINKLER & HYDRANT SYSTEM
WORKING PRESSURE 1240 kPa
TEST PRESSURE 1550 kPa
PM 201
300x225mm

BOOSTER CONNECTION
PM202
300x225mm
300x450mm

INTRUDER ALARM INSTALLED IN THESE PREMISES
PM203
300x225mm

INTRUDER ALARM INSTALLED IN THIS BUILDING
PM204
300x225mm

INSTALLATION PRESSURE GAUGE
PM205
300x225mm

FIRE & DOMESTIC ISOLATION VALVE
PM206
300x225mm

QUICK FILL VALVE
PM207
300x225mm

TEST PRESSURE 1800 kPa
SAFE WORKING PRESSURE 1200 kPa
PM208
300x225mm

EWIS PANEL
PM 209
300x225mm

BRIGADE SUCTION
PM 210
300x225mm

TANK SUCTION
PM 211
300x225mm

TANK SUCTION POINT
PM 212
150x150mm

STORAGE WATER SUPPLY
PM 213
300x225mm

DO NOT RIDE ON MOVING PLATFORM
PM2 14
300x225mm

FEED HYDRANT
PM215
300x100mm

SUCTION POINT
PM216
300x100mm

HIGH RISE WORKING PRESSURE 1590 kPa
TEST PRESSURE 1800 kPa
PM217
400x100mm

LOW RISE WORKING PRESSURE 1070kPA
TEST PRESSURE 1700kPA
PM218
400x100 mm

BUILDING EMERGENCY ALARM
PM 219
190x150mm

FIRE WATER 25000 KILO LTR
PM220
300x 225mm

MAX INLET PRESSURE 1033 kPa
PM221
300x225mm

SITE EVACUATION BUTTON
PM222
300x225mm

HIGH RISE BOOSTER PRESSURE
PM 223
300x225mm

LOW RISE BOOSTER PRESSURE
PM 224
300x225mm

ELECTRICAL SERVICES
PM225
300x225mm

WATER SERVICES
PM226
300x225mm

GAS SERVICES
PM227
300x225mm

FIRE SIGNS - MEDIUM

All signs below are available in Plastic, S/Adhesive and Galvanised metal powder coated and printed.

PM228
300X225mm

PM229
300X225mm

PM230
300X225mm

PM231
300X225mm

PM232
300X225mm

PM233
300X225mm

PM234
300X225mm

PM235
300X225mm

PM236
300X225mm

PM237
300X225mm

PM238
300X225mm

PM239
300X225mm

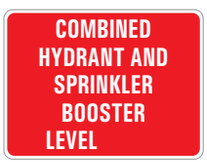

PM240
300X225mm

PM241
300X225mm

PM242
300X225mm

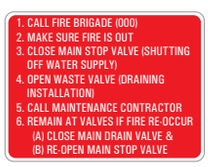

PM243
300X225mm

PM244
300X225mm

PM245
300X225mm

PM246
300X225mm

PM247
300X225mm

PM248
300X225mm

PM249
300X225mm

PM250
300X225mm

PM251
300X225mm

PM252
300X225mm

PM253
300X225mm

PM254
300X225mm

PM255
300X225mm

PM256
300X225mm

PM257
300X225mm

Fire Australia Co Pty Ltd.
ABN No. 13165523713
47 Rushdale St. Knoxfield VIC-3180. Tel:(03) 9764 0020, Fax: (03) 9764 0023.
E-mail : sales@fireausco.com.au www.fireausco.com.au

FIRE AUSTRALIA CO

All signs below are available in Plastic, S/Adhesive and Galvanised metal powder coated and printed.

PM258
300X225mm

PM259
300X225mm

PM260
300X225mm

PM261
300X225mm

PM262
300X225mm

PM263
300X225mm

PM264
300X225mm

PM265
300X225mm

PM266
300X225mm

PM267
300X225mm

PM268
300X225mm

PM269
300X225mm

PM270
300X225mm

PM271
300X225mm

PM272
300X225mm

PM273
300X225mm

PM274
300X225mm

PM275
300X225mm

PM276
300X225mm

PM277
300X225mm

PM278
300X225mm

PM279
300X225mm

PM280
300X225mm

PM281
300X225mm

PM282
300X225mm

PM283
300X225mm

PM284
300X225mm

PM285
300X225mm

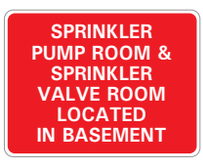

PM286
300X225mm

PM287
300X225mm

PM288
300X225mm

PM289
300X225mm

PM290
300X225mm

PM291
300X225mm

PM292
300X225mm

PM293
300X225mm

PM294
300X225mm

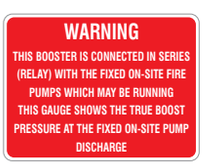

PM295
300X225mm

PM296
300X225mm

PM297
300X225mm

FIRE SIGNS - MEDIUM

All signs below are available in Plastic, S/Adhesive and Galvanised metal powder coated and printed.

ZONE 1
TEST PRESSURE
1700 kPa
WORKING PRESSURE
860 kPa

PM298
450X300mm

ZONE 2
TEST PRESSURE
1700 kPa
WORKING PRESSURE
1140 kPa

PM299
450X300mm

ZONE 3
TEST PRESSURE
1700 kPa
WORKING PRESSURE
1360 kPa

PM300
450X300mm

ZONE 4
TEST PRESSURE
1900 kPa
WORKING PRESSURE
1700 kPa

PM301
450X300mm

ZONE 5
TEST PRESSURE
2200 kPa
WORKING PRESSURE
2000 kPa

PM302
450X300mm

HYDRANT ZONE 2
WORKING PRESSURE
1520 kPa
TEST PRESSURE 1750 kPa

PM303
450X300mm

HYDRANT ZONE 1
WORKING PRESSURE
1150 kPa
TEST PRESSURE 1750 kPa

PM304
450X300mm

EMERGENCY
EQUIPMENT
LOCATED IN
CUPBOARD

PM305
450X300mm

TECHNICIANS
UNDERTAKING
HOT WORKS TO BE
EQUIPPED WITH A
FIRE EXTINGUISHER

PM306
450X300mm

ACCESS
TO
STREET

PM307
450X300mm

SPRINKLER
CONTROL
VALVES

PM308
450X300mm

SPRINKLER
BOOSTER
INSIDE

PM309
450X300mm

FIRE HYDRANT
BOOSTER
WORKING PRESSURE 880 kPa
TEST PRESSURE 1700 kPa

PM310
450X300mm

FIRE
SPRINKLER
CONTROL
ROOM

PM311
450X300mm

HOSE REEL
ISOLATION
VALVE

PM312
450X300mm

QUAD
SUCTION

PM313
450X300mm

FIRE
WATER
TANK

PM314
450X300mm

LOW HYDRANT
PRESSURE
ALTERNATIVE
WATER SOURCE
MAY BE REQUIRED

PM315
450X300mm

FIRE
SERVICE TEST
DRAIN

PM316
450X300mm

HYDRANT
BOOSTER
CONNECTION
MAX INLET PRE 1000 kPa

PM317
450X300mm

DRENCHERS
ISOLATION VALVE
LOCATED IN
BASEMENT
CAR PARK

PM318
450X300mm

SPRINKLER
BOOSTER
INSIDE

PM319
450X300mm

HYDRANT
ISOLATION
VALVE
LOCK OPEN

PM320
450X300mm

ATTACK HYDRANT
ONLY NOT TO
BE USED AS A
FEED HYDRANT

PM321
450X300mm

Fire Australia Co Pty Ltd.
ABN No. 13165523713
47 Rushdale St. Knoxfield VIC-3180. Tel:(03) 9764 0020, Fax: (03) 9764 0023.
E-mail : sales@fireausco.com.au www.fireausco.com.au

FIRE AUSTRALIA CO

All signs below are available in Plastic, S/Adhesive and Galvanised metal powder coated and printed.

2 X 30M LENGTHS OF HOSE WILL BE REQUIRED TO ACHIEVE FULL COVERAGE
PM322
450X300mm

TWO LENGTHS OF HOSE WILL BE REQUIRED TO ACHIEVE FULL COVERAGE
PM323
450X300mm

3 X 30M LENGTHS OF HOSE WILL BE REQUIRED TO ACHIEVE FULL COVERAGE
PM324
450X300mm

90M OF HOSE REQUIRED FOR FULL COVERAGE
PM325
450X300mm

TWO/THREE LENGTHS OF HOSE WILL BE REQUIRED TO ACHIEVE FULL COVERAGE
PM326
450X300mm

ISOLATE THIS STOP VALVE BEFORE STARTING THE BRIGADE RLAY PUMP
PM327
450X300mm

FIRE HYDRANT & SPRINKLER BOOSTER CONNECTIONS
PM328
450X300mm

RESIDENTIAL SPRINKLER CONTROL
PM329
450X300mm

FIRE SPRINKLER BOOSTER
WORKING PRESSURE PUMP 1: 1019 kPa
WORKING PRESSURE PUMP 2: 1019 kPa
PM330
450X300mm

EMEGENCY EXIT ONLY
Alarm will sound
PM331
450X300mm

WINDOW DRENCHER SHUT OFF VALVE
PM332
450X300mm

THIS IS A FIRE EXIT DO NOT OBSTRUCT ACCESS
PM333
450X300mm

COMBINED HYDRANT SPRINKLER PUMP ROOM
PM334
450X300mm

COMBINED FIRE HYDRANT & SPRINKLER BOOSTER
PM335
450X300mm

FIRE WATER TANK CAPACITY 10,000 LITRES
PM336
450X300mm

HYDRANT BOOSTER CONNECTION
MAX WORKING PRESSURE 1200 kPa
TEST PRESSURE 1400 kPa
PM337
450X300mm

FIRE HYDRANT AND SPRINKLER BOOSTER
PM338
450X300mm

CONSTRUCTION BOOSTER
PM339
450X300mm

SUCTION
PM340
450X300mm

IN THE EVENT OF A FIRE DO NOT USE LIFT
PM341
450X300mm

FIRE HYDRANT & SPRINKLER BOOSTER CONNECTIONS
PM342
450X300mm

SPRINKLER BOOSTER CONNECTION
MAX WORKING PRESSURE 1000 kPa
TEST PRESSURE 1200 kPa
PM343
450X300mm

TANK CAPACITY 470,000 LITRES
PM344
450X300mm

FIRE RATED CEILING DO NOT PENETRATE
PM345
450X300mm

RESIDENTIAL SPRINKLER CONTROL VALVE
PM346
280X140mm

I. S. COVER BELOW
PM347
250X250mm

HYDRANT ISOLATION VALVE NO. 12
PM348
200X100mm

FIRE ISOLATION VALVE UNDER PANEL
PM350
225X100mm

FIRE DOOR
DO NOT OBSTRUCT
AUSTRALIAN STANDARDS 1851-2012 & 1905.1-2005
PM351
400X225mm

Fire Australia Co Pty Ltd.
ABN No. 13165523713
47 Rushdale St. Knoxfield VIC-3180. Tel:(03) 9764 0020, Fax: (03) 9764 0023.
E-mail : sales@fireausco.com.au www.fireausco.com.au

FIRE SIGNS - LARGE

All signs below are available in Plastic, S/Adhesive and Galvanised metal powder coated and printed.

FIRE TANK 450,000 LITRES
PM351
600X450mm

FIRE WATER TANK CAPACITY LTRS
PM352
600X450mm

TANK CAPACITY LTRS
PM353
600X450mm

FIRE FIGHTER ACCESS
PM354
600X450mm

FLAMMABLE LIQUID
NO SMOKING
NO NAKED FLAMES
NO HEAT SOURCES
WITHIN 5 METRES
PM355
600X450mm

FIRE SERVICE ISOLATING VALVE NO.
PM356
600X450mm

FH
SPRINKLER BOOSTER
BEHIND ROLLER DOOR
PM357
600X450mm

SPRINKLER BOOSTER
WORKING PRESSURE
TEST PRESSURE
1400 kPa
PM358
600X450mm

IN CASE OF FIRE
STREET HYDRANT
LOCATED AT:
81 SEVEN HILLS RD
PM359
600X450mm

SPRINKLER CONTROL VALVES DO NOT OBSTRUCT
PM360
600X450mm

MONITORED VALVE LOCATED BEHIND WALL ACCESS THROUGH GRILL
PM361
600X450mm

COMBINED SPRINKLER & HYDRANT BOOSTER
PM362
600X450mm

TWO/THREE LENGTHS OF HOSE WILL BE REQUIRED TO ACHIEVE FULL COVERAGE
PM363
600X450mm

2 X 30M LENGTHS OF HOSE WILL BE REQUIRED TO ACHIEVE FULL COVERAGE
PM364
600X450mm

TWO LENGTHS OF HOSE WILL BE REQUIRED TO ACHIEVE FULL COVERAGE
PM365
600X450mm

3 X 30M LENGTHS OF HOSE WILL BE REQUIRED TO ACHIEVE FULL COVERAGE
PM366
600X450mm

SPRINKLER FIRE PUMP ROOM WITH SPRINKLER STOP VALVE INSIDE
PM367
600X450mm

COMBINED HYDRANT SPRINKLER PUMP ROOM
PM368
450X300mm

FIRE EXIT
KEEP CLEAR AT ALL TIMES
PM369
1000X600mm

FIRE BOOSTER ASSEMBLY
PM370
1000X600mm

COMBINED HYDRANT & SPRINKLER PUMP HOUSE
PM371
1000X600mm

CARPARK ACCESS KEEP CLEAR IN USE 24 HRS
PM372
1000X500mm

SPRINKLER CONTROL VALVES LOCATED IN BUILDING B
PM373
450X300mm

Fire Australia Co Pty Ltd.
ABN No. 13165523713
47 Rushdale St. Knoxfield VIC-3180. Tel:(03) 9764 0020, Fax: (03) 9764 0023.
E-mail : sales@fireausco.com.au www.fireausco.com.au

FIRE AUSTRALIA CO

All signs below are available in Plastic, S/Adhesive and Galvanised metal powder coated and printed.

PL16
600x450mm

PL21
600x450mm

PL26
600x450mm

PL27A
600x450mm

PL28
600x450mm

PL29
600x450mm

PL30
600x450mm

PL32
600x450mm

PL33
600x450mm

PL33A
600x450mm

PL34
600x450mm

PL35
600x450mm

PL35A
600x450mm

PL36
600x450mm

PL37
600x450mm

PL37A
600x450mm

PL38
600X450mm

PL39
600x450mm

PL40
600x450mm

PL40A
600 x 450mm

PL41
600x450mm

PL41A
900x600mm

PL42
600x450mm

PL43
600x450mm

FIRE SIGNS - LARGE

All signs below are available in Plastic, S/Adhesive and Galvanised metal powder coated and printed.

PL44
600x200mm

PL45
600x200mm

PL46
600x125mm

PL47
600x450mm

PL48
600x125mm

PL49
600x450mm

PL50
600x450mm

PL51
600x450mm

PL52
600x450mm

PL53
600x450mm

PL54
600x450mm

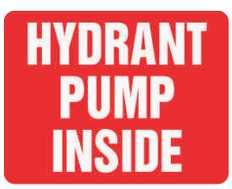

PL56
600x450mm

PL57
600x450mm

PL58
600x450mm

PL59
600x450mm

PL60
600x450mm

PL61
600x450mm

PL62
600x450mm

PL63
600X450mm

Fire Australia Co Pty Ltd.
ABN No. 13165523713
47 Rushdale St. Knoxfield VIC-3180. Tel:(03) 9764 0020, Fax: (03) 9764 0023.
E-mail : sales@fireausco.com.au www.fireausco.com.au

FIRE AUSTRALIA CO

All signs below are available in Plastic, S/Adhesive and Galvanised metal powder coated and printed.

SPRINKLER BOOSTER

PL64
625X200mm

COMBINED HYDRANT & PRINKLER FEED

PL67
600X200mm

LOW FIRE HYDRANT PRESSURE BOOSTING WILL BE REQUIRED

PL69
600X200mm

HYDRANT DIESEL PUMP

PL71
600X150mm

Red Strobe - Fire Alarm
Amber Strobe - system Fault/Isolate

PL67
500X200mm

FIRE HYDRANT LOW PRESSURE

PL74
500X200mm

LP GAS EMERGENCY STOP PUSH BUTTON

PL65
600X450mm

FUEL EXCLUSION ZONE

PL70
600X450mm

FUEL EXCLUSION ZONE

P72
600X450mm

Load Limit On Concrete Deck 2500 Ton

PL75
500X400mm

HYDRANT BOOSTER CONNECTION
MAX WORKING PRESSURE 1400 kPa

PL66
450X250mm

HYDRANT BOOSTER CONNECTION BEHIND THIS WALL

PL68
450X250mm

DFO
FIRE SERVICE TOWNS MAIN VMA ZONE NUMBERS- 2425 and 2426

PL73
400X300mm

MARINA

PL76
400X300mm

EMERGENCY EXIT

PL76
400X200mm

FIRE INDICATOR PANEL

ML77
430X400mm

DUST COVER ONLY NO STORAGE PERMITTED

PL78
440X340mm

NO STANDING NO MATERIAL STORAGE

PL79
600X450mm

FIRE SERVICE ISOLATING VALVE NO. 1 4 METERS
FIRE SERVICE ISOLATING VALVE NO. 2 5 METERS

PL80
350X300mm

THIS AREA IS FITTED WITH A
NAFS-III
FIRE SUPPRESSION SYSTEM
EVACUATE AREA ON SOUNDING OF ALARM
DO NOT ENTER
after NAFS-III gas discharge until area has been thoroughly ventilated

PL81
300X300mm

All Tags below are available in polypropylene.

FIRE EXTINGUISHER INSIDE
TAG P-1
105 x 50mm

• FIRE HOSE REEL SERVICE - LOCK OPEN
TAG P-2
125x25mm

• FIRE MAIN VALVE - LOCK OPEN
TAG P-3
100x25mm

• FIRE MAIN VALVE LOCK CLOSED
TAG P-3A
135 x 35mm

• FIRE SERVICE TO BE OPENED BY 003 KEY
TAG P-4
135x35mm

• FIRE SERVICE VALVE - CLOSE ONLY TO SERVICE FIRE HOSE REELS
TAG P-5
140x35mm

• FIRE HOSE REEL SERVICE - SECURE OPEN (USE ONLY 003 FIRE SERVICE LOCK)
TAG P-6
125x30mm

• FIRE MAIN VALVE SECURE OPEN (USE ONLY 003 FIRE SERVICE LOCK)
TAG P-7
100x40mm

• FIRE MAIN VALVE SECURE OPEN
TAGP-8
100x40mm

• FIRE SERVICE ISOLATION VALVE LOCK OPEN
TAGP-9
100x40mm

• FIRE SERVICE ISOLATION VALVE LOCK CLOSED
TAGP-10
100x40mm

• FIRE SERVICE ISOLATION VALVE NO.1
TAGP-11
100x35mm
(Available in no. 1 to 46)

• FIRE SERVICE SV1
TAG P -12
100x25mm
(Available in SV1 to SV10)

TO FIRE INDICATOR PANEL
TAG P-13
80x40mm

FIRE SERVICE VALVE CLOSE OTHER
TAG P-14
50x50mm

FIRE PUMP MANUAL
TAG P-15
80x40mm

FIRE MODE PRESSURE SWITCH
TAG P-16
80x40mm

FIRE SPRINKLERS
TAG P-17
80x40mm

FIRE SPRINKLER DIESEL PUMP
TAG P-18
100x40mm

FIRE SPRINKLER DIESEL PUMP NO. 1
TAG P-19
80x40mm
(Available in different numbers)

FIRE SPRINKLER ELECTRIC PUMP
TAG P-20
100x40mm

FIRE HYDRANT
TAG P-21
50x50mm

FIRE ALARM
TAG P-22
50x50mm

FIRE BRIGADE SUCTION
TAG P-23
50x50mm

• SPRINKLER MONITORED VALVE
TAG P-24
75x30mm

SPRINKLER TEST VALVE
TAG P-25
75x30mm

SPRINKLER FLOW SWITCH
TAG P-26
75x30mm

SPRINKLER FLOW SWITCH TEST VALVE LOCK CLOSED
TAG P-27
75x30mm

• SPRINKLER ISOLATION VALVE LOCK OPEN
TAG P-28
100x40mm

SPRINKLER VALVE AT REAR OF PROPERTY
TAG P-29
100x40mm

SPRINKLER REMOTE TEST LOCK SHUT
TAG P-30
100x40mm

SPRINKLER REMOTE TEST VALVE LOCK CLOSED
TAG P-31
75x30mm

SPRINKLER DIESEL PUMP CUT IN
TAG P-32
50x50mm

SPRINKLER ELECTRIC PUMP CUT IN
TAG P-33
50x50mm

SPRINKLER BOOSTER SYSTEM
TAG P-34
50x50mm

SPRINKLER PRESSURE SWITCH
TAG P-35
50x50mm

• SPRINKLER PUMP MOTOR SUPPLY NTBSO •
TAG P-36
50x50mm

SPRINKLER SYSTEM DO NOT ISOLATE
TAG P-37
125x125mm

SPRINKLER HIGH RISE BOOSTER
TAG P-38
125x125mm

SPRINKLER MEDIUM RISE BOOSTER
TAG P-39
125x125mm

SPRINKLER LOW RISE BOOSTER
TAG P-40
125x125mm

SPRINKLER BOOSTER VALVE INSIDE
TAG P-41
125x125mm

SPRINKLER BOOSTER VALVE
TAG P-42
125x125mm

SPRINKLER SYSTEM SUCTION
TAG P-43
125x125mm

• THIS HYDRANT IS NOT SUPPLIED OFF THE BOOSTER HYDRANT SYSTEM
TAG P-44
120x35mm

• HYDRANT PUMP TEST LINE
TAG P-45
100x40mm

HYDRANT PRESSURE
TAG P-46
50x50mm

Fire Australia Co Pty Ltd.
ABN No. 13165523713
47 Rushdale St. Knoxfield VIC-3180. Tel:(03) 9764 0020, Fax: (03) 9764 0023.
E-mail : sales@fireausco.com.au www.fireausco.com.au

FIRE AUSTRALIA CO

All Tags below are available in polypropylene.

HYDRANT SYSTEM PRESSURE
TAG P-46A
50x50mm

HYDRANT PUMP TEST VALVE NORMALLY CLOSED
TAG P-47
50x50mm

HYDRANT STOP VALVE NORMALLY OPEN
TAG P-48
50x50mm

HYDRANT BOOSTER VALVE
TAG P-49
125x125mm

HYDRANT SYSTEM BOOSTER
TAG P-50
125x125mm

HOSE REEL
TAG P-51
50x50mm

HOSE REEL PUMP TEST VALVE
TAG P-52
50x50mm

INSTALLATION PRESSURE
TAG P-53
50x50mm

INSTALLATION PRESSURE NO.1
TAG P-54
50x50mm

INSTALLATION NO.1
TAG P-55
50x50mm
(Available in different numbers)

INSTALLATION JACKING PUMP
TAG P-56
50x50mm

INSTALLATION PRESSURE SWITCH
TAGP-57
50x50mm

ELECTRIC PUMP PRESSURE SWITCH
TAG P-58
50x50mm

DIESEL PUMP PRESSURE SWITCH
TAG P-59
50x50mm

TEST LINE
TAG P-60
50x50mm

DRAIN LINE
TAG P-61
50x50mm

BRIGADE LINE
TAG P-62
50x50mm

LOCAL ALARM LINE
TAG P-63
50x50mm

TANK QUICK FILL VALVE NORMALLY CLOSED
TAG P-64
100x25mm

• TANK QUICK FILL VALVE NO.1
TAG P-65
100x25mm
(Available in different/sequential numbers)

• VALVE 1
TAG P-66
100x50mm
(Available in different/sequential numbers)

ISOLATION VALVE LOCK OPEN
TAG P-67
80x40mm

ISOLATION VALVE LOCK CLOSED
TAG P-68
80x40mm

TEST VALVE LOCK CLOSED
TAG P-69
80x40mm

TEST VALVE NORMALLY CLOSED
TAG P-70
50x50mm

NORMALLY OPEN
TAG P-71
50x50mm

NORMALLY CLOSED
TAG P-72
50x50mm

STOP VALVE NORMALLY CLOSED
TAG P-73
50x50mm

MAIN STOP VALVE NORMALLY OPEN
TAG P-74
50x50mm

MAIN STOP VALVE NORMALLY CLOSED
TAG P-75
50x50mm

DRAIN VALVE
TAG P-76
50x50mm

DRAIN VALVE NORMALLY OPEN
TAG P-77
50x50mm

DRAIN VALVE NORMALLY CLOSED
TAG P-78
50x50mm

DRAIN VALVE LOCK CLOSED
TAG P-79
50x50mm

DRAIN/ TEST VALVE LOCK CLOSED
TAG P-80
50x50mm

FLOW SWITCH TEST DRAIN NORMALLY CLOSED
TAG P-81
50x50mm

FLOW SWITCH TEST VALVE LOCK OPEN
TAG P-82
50x50mm

FLOW SWITCH TEST VALVE LOCK CLOSED
TAG P-83
50x50mm

JACKING PUMP PRESSURE SWITCH
TAG P-84
50x50mm

JACKING PUMP CUT IN
TAG P-85
50x50mm

JACKING PUMP START
TAG P-86
50x50mm

JACKING PUMP ISOLATING VALVE NORMALLY OPEN
TAG P-87
50x50mm

JACKING PUMP NORMALLY CLOSED
TAG P-88
50x50mm

JACKING PUMP SUCTION VALVE
LOCK CLOSED
TAG P-89
80x40mm

JACKING PUMP DISCHARGE VALVE
LOCK CLOSED
TAG P-90
80x40mm

AUTO JACKING PUMP SUCTION VALVE
LOCK OPEN
TAG P-91
100x40mm

AUTO JACKING PUMP DO NOT SWITCH OFF
TAG P-92
100x40mm

AUTO JACKING PUMP DISCHARGE VALVE
LOCK OPEN
TAG P-93
100x40mm

Fire Australia Co Pty Ltd.
ABN No. 13165523713
47 Rushdale St. Knoxfield VIC-3180. Tel:(03) 9764 0020, Fax: (03) 9764 0023.
E-mail : sales@fireausco.com.au www.fireausco.com.au

All Tags below are available in polypropylene.

DIESEL PUMP PRESSURE SWITCH
TAG P-94
80x40mm

DIESEL PUMP NO. 1 PRESSURE SWITCH
TAG P-95
80x40mm
(Available in different numbers)

DIESEL PUMP START PRESSURE SWITCH
TAG P-96
50x50mm

LOW PRESSURE ALARM PRESSURE SWITCH
TAG P-97
50x50mm

SYSTEM OPERATED ALARM PRESSURE SWITCH
TAG P-98
50x50mm

PRESSURE SWITCH TEST BOARD
TAG P-99
50x50mm

ELECTRIC PUMP START PRESSURE SWITCH
TAG P-100
50x50mm

EVACUATION PRESSURE SWITCH
TAG P-101
50x50mm

DBA PRESSURE SWITCH
TAG P-102
50x50mm

DIRECT BRIGADE ALARM PRESSURE SWITCH
TAG P-103
50x50mm

AIR CONDITIONING SHUTDOWN PRESSURE SWITCH
TAG P-104
50x50mm

PRESSURE RELIEF ISOLATING VALVE
TAG P-105
50x50mm

A.S.E ALARM PRESSURE SWITCH
TAG P-106
50x50mm

A.S.E ISOLATING VALVE NORMALLY OPEN
TAG P-107
50x50mm

RAIN WATER PUMP
TAG P-108
100x25mm

HOT WATER PLANT
TAG P-109
100x25mm

COLD WATER PRESSURE PUMP
TAG P-110
100x25mm

• GREY WATER FUTURE POINT
TAG P-111
100x25mm

• HOT WATER DO NOT DISCONNECT
TAG P-112
100x25mm

• WINDOW DRENCHER ISOLATION VALVE
TAG P-113
85x25mm

• SHARED SERVICE TO BE OPENED BY 003 KEY
TAG P-114
65x25mm

• PULL PIN STRIKE KNOB TO RELEASE DELUGE FIRE HOSE
TAG P-115
105x40mm

• DELUGE FIRE HOSE MANUAL RELEASE PULL HANDLE
TAG P-116
100x40mm

LOCK OPEN
TAG P-117
50x50mm

LOCAL ALARM
TAG P-118
50x50mm

LOCAL ALARM LOCK OPEN
TAG P-119
80x40mm

LOCAL ALARM PRESSURE SWITCH
TAG P-120
50x50mm

LOCAL ALARM ISOLATING VALVE NORMALLY OPEN
TAG P-121
50x50mm

PUMP BYPASS VALVE NORMALLY OPEN
TAG P-122
50x50mm

PUMP DELIVERY VALVE NORMALLY OPEN
TAG P-123
50x50mm

PUMP SUCTION VALVE NORMALLY OPEN
TAG P-124
50x50mm

PUMP SUCTION PRESSURE
TAG P-125
80x40mm

PUMP SUCTION ISOLATION VALVE LOCK OPEN
TAG P-126
80x40mm

PUMP DISCHARGE PRESSURE
TAG P-127
80x40mm

PUMP DISCHARGE ISOLATION VALVE LOCK OPEN
TAG P-128
80x40mm

PUMP NO.1
TAG P-129
50x50mm
(Available in different numbers)

PRIMARY PUMP
TAG P-130
80x25mm

SECONDARY PUMP
TAG P-131
80x25mm

BRIGADE TRANSPONDER ISOLATING VALVE NORMALLY OPEN
TAG P-132
80x40mm

BRIGADE ALARM ISOLATION VALVE NO.
TAG P-133
50x50mm

BRIGADE ALARM FLOW SWITCH
TAG P-134
80x40mm

BRIGADE ALARM LOCK OPEN
TAG P-135
80x40mm

TOWN MAINS PRESSURE
TAG P-136
50x50mm

TOWN MAINS VALVE NORMALLY OPEN
TAG P-137
50x50mm

SWITCH ROOM EXHAUST FAN NORMALLY OPEN
TAG P-138
50x50mm

PULL TO STOP DIESEL ENGINE
TAG P-139
50x50mm

WASTE & TEST VALVE NORMALLY CLOSED
TAG P-140
50x50mm

WASTE & TEST VALVE
TAG P-141
50x50mm

MJC
TAG P-142
50x50mm

MJC PROTECTED
TAG P-143
50x50mm

MJC DRAIN
TAG P-144
50x50mm

Fire Australia Co Pty Ltd.
ABN No. 13165523713
47 Rushdale St. Knoxfield VIC-3180. Tel:(03) 9764 0020, Fax: (03) 9764 0023.
E-mail : sales@fireausco.com.au www.fireausco.com.au

FIRE AUSTRALIA CO

All Tags below are available in polyproplene .

ANUBAR DRAIN	240V	MANIFOLD PRESSURE	MAXIMUM STORAGE HEIGHT	PULL TO STOP	MANUAL STOP	MANUAL TANK FILL	AIR BLEED
TAG P-145 50x50mm	TAG P -146 50x50mm	TAG P-147 50x50mm	TAG P -148 50x50mm	TAG P -149 50x50mm	TAG P-150 50x50mm	TAG P-151 50x50mm	TAG P -152 50x50mm

MAIN STOP VALVE LOCK OPEN	STOP VALVE LOCK OPEN	REMOTE TEST VALVE LOCK CLOSED	SYSTEM PRESSURE	SUPPLY PRESSURE	SPARE SPRINKLERS	TEST IN PROGRESS
TAG P-153 80x40mm	TAG P-154 80x40mm	TAG P -155 80x40mm	TAG P-156 80x25mm	TAG P-157 80x25mm	TAG P -158 80x25mm	TAG P -159 100x85mm

ALERT	EVACUATE	DRENCHER SYSTEM	DOMESTIC ISOLATING VALVE	FIRE SERVICE ISOLATION VALVE NO.	FIRE SERVICE ISOLATION VALVE NO.1
TAG P -160 100x100mm	TAG P-161 100x100mm	TAG P -162 125x125mm	TAG P -163 125x125mm	TAG P -164 220x75mm	TAG P-165 220x75mm (Available in different numbers)

• STAIR RISER	• NORTHERN RISER	• CENTRAL RISER	• SOUTHERN RISER	• MAIN WATER SUPPLY	• HOT WATER SUPPLY	• DOMESTIC B/U TO GREY WATER	• DOMESTIC B/U TO RAINWATER
TAG P -166 60x30mm	TAG P-167 60x30mm	TAG P -168 60x30mm	TAG P-169 60x30mm	TAG P-170 60x30mm	TAG P-171 60x30mm	TAG P -172 60x30mm	TAG P-173 60x30mm

• RAINWATER TO GARDEN TAPS	• GREY WATER TO WC'S	• RAINWATER TO WC'S	STORMWATER PUMP CONTROL	RW DOMESTIC BACKUP	RW TO GARDEN
TAG P-174 60x30mm	TAG P-175 60x30mm	TAG P -176 60x30mm	TAG P -177 150x40mm	TAG P -178 150x40mm	TAG P -179 150x40mm

DOMESTIC HOT WATER SUPPLY	DOMESTIC HOT WATER FLOW	DOMESTIC TO RADS	RAINWATER REUSE PUMP	HOT WATER PLANT
TAG P -180 150x40mm	TAG P -181 150x40mm	TAG P -182 150x40mm	TAG P -183 150x40mm	TAG P -184 150x40mm

RW TO WC	DCW TO LEVEL 4	FIRE FIGHTING SUPPLY	LIFT SUMP SUCTION	CONSTANT PRESSURE PUMP
TAG P-185 150x40mm	TAG P -186 150x40mm	TAG P -187 150x40mm	TAG P -188 150x40mm	TAG P -189 150x40mm

SEWER INSPECTION SHAFT	MAIN METER	WEST	EAST	SOUTH
TAG P -190 150x40mm	TAG P -191 150x40mm	TAG P -192 150x40mm	TAG P -193 150x40mm	TAG P -194 150x40mm

KN1 COOKTOPS	KN1 PLANT	KN2 HEATING
TAG P -195 150x40mm (available from KN1 to KN4)	TAG P -196 150x40mm (available from KN1 to KN 4)	TAG P -197 150x40mm

BEST QUALITY
BEST PRICES
NO ARTWORK OR
TOOLING CHARGES

Fire Australia Co Pty Ltd.
ABN No. 13165523713
47 Rushdale St. Knoxfield VIC-3180. Tel:(03) 9764 0020, Fax: (03) 9764 0023.
E-mail : sales@fireausco.com.au www.fireausco.com.au

All Tags below are available in polyproplene .

PUMP START PRESSURE SWITCH	PRESSURE RELIEF VALVE	DETECTOR CONNECTED TO LIBRARY FIP	GONG LOCK OPEN	MANUAL CALL POINT	ANUBAR VALVE LOCK SHUT	PRESSURE SWITCH LOCK OPEN
TAG P-198 50X50mm	TAG P-199 50X50mm	TAG P-200 50X50mm	TAG P-201 50X50mm	TAG P-202 50X50mm	TAG P-203 50X50mm	TAG P-204 50X50mm
PUMPED SPRINKLER MAIN	OPERATION OF HYDRANT WILL ACTIVATE PUMP	REMOTE TEST DRAIN	RESTRICTED ORIFICE	TANK SUCTION	FLOW SWITCH DRAIN	FIRE ALARM IN CONCEALED SPACE ABOVE
TAG P-205 50X50mm	TAG P-206 50X50mm	TAG P-207 50X50mm	TAG P-208 50X50mm	TAG P-209 50X50mm	TAG P-210 50X50mm	TAG P-211 50X50mm
DRENCHER SYSTEM	JACKING PUMP LINE	ALARM LINE DRAIN	DIRECT BRIGADE ALARM	FIRE ALARM IN CONCEALED SPACE ABOVE	OPERATION OF HYDRANT WILL ACTIVATE PUMP	DOMESTIC ISOLATING VALVE
TAG P-212 50X50mm	TAG P-213 50X50mm	TAG P-214 50X50mm	TAG P-215 50X50mm	TAG P-216 50X50mm	TAG P-217 50X50mm	TAG P-218 50X50mm
CV-L4-01 PLANT AREA AND ROOF	LOW RISE	INSTALLATION PRESSURE GAUGE	COMBINED SUPPLY	COMBINED MAIN PRESSURE GAUGE	FLOW SWITCH	SPARES CABINET
TAG P-219 50X50mm	TAG P-220 50X50mm	TAG P-221 50X50mm	TAG P-222 50X50mm	TAG P-223 50X50mm	TAG P-224 50X50mm	TAG P-225 50X50mm
DBA LOCK OPEN	FLOW TEST DRAIN LOCK SHUT	REMOTE TEST DRAIN	FIRE MAIN PRESSURE SWITCH	ALARM PRESSURE SWITCH	THIS ALARM IS NOT MONITORED	
TAG P-226 50X50mm	TAG P-227 50X50mm	TAG P-228 50X50mm	TAG P-229 50X50mm	TAG P-230 50X50mm	TAG P-231 150X50mm	
FIRE ISOLATION VALVE INSIDE	FIRE TEST VALVE SECURE CLOSED	FIRE SERVICE VALVE CLOSE ONLY TO SERVICE SPRINKLER WINDOW DRENCHER	APARTMENT ISOLATION VALVE LOCK OPEN			
TAG P-232 100X40mm	TAG P-233 100X40mm	TAG P-234 100X40mm	TAG P-235 150X40mm			
SPRINKLER DRAIN VALVE TO BE LOCKED OPEN	SPRINKLER MAIN STOP VALVE TO BE LOCKED OPEN	CAR STACKERS	GROUND FLOOR	FIP		
TAG P-236 120X30mm	TAG P-237 120X30mm	TAG P-238 130X30mm	TAG P-239 130X30mm	TAG P-240 100X65mm		
GROUND LEVEL SPRINKLERS ISOLATION VALVE	DRENCHER SPRINKLERS ISOLATION VALVE	LOW RISE DRAIN	HIGH RISE DRAIN	MID RISE DRAIN		
TAG P-241 100X55mm	TAG P-242 105X55mm	TAG P-243 90X55mm	TAG P-244 90X55mm	TAG P-245 90X55mm		

Fire Australia Co Pty Ltd.
ABN No. 13165523713
47 Rushdale St. Knoxfield VIC-3180. Tel:(03) 9764 0020, Fax: (03) 9764 0023.
E-mail : sales@fireausco.com.au www.fireausco.com.au

FIRE AUSTRALIA CO

All Tags below are available in polyproplene .

HOSE REEL ISOLATION VALVE
TAG P-246
140X50mm

SPRINKLER ISOLATION VALVE
TAG P-247
140X50mm

2 LENGTHS OF HOSE REQUIRED
TAG P-248
135X50mm

3 LENGTHS OF HOSE REQUIRED
TAG P-249
140X50mm

SPRINKLER TANK SUCTION
TAG P-250
200X30mm

HYDRANT BOOST PRESSURE 900kPa
TAG P-251
610X110mm

TEST PRESSURE 1700 kPa
TAG P-252
300X100mm

LOW FIRE HYDRANT PRESSURE & FLOW BOOSTING WILL BE REQUIRED
TAG P-253
300X100mm

STAGE 1
TAG P-254
300X100mm

STAGE 2
TAG P-255
300X100mm

STAGE 3
TAG P-256
300X100mm

STAGE 4
TAG P-257
300X100mm

STAGE 5
TAG P-258
300X100mm

FIRE HYDRANT SERVICE
TAG P-259
300X100mm

FIRE SPRINKLER SERVICE
TAG P-260
300X100mm

SPRINKLER PUMP RUNNING
TAG P-261
250X75mm

HYDRANT PUMP RUNNING
TAG P-262
250X75mm

CAR PARKING
TAG P-263
300X75mm

LEVEL G - 12
TAG P-264
390X90mm

IN AN EMERGENCY BREAK GLASS & PUSH BUTTON
TAG P-265
400X50mm

BUILDING BC EWIS
TAG P-266
300X45mm

CAR PARK ISOLATION VALVE
TAG P-267
200X100mm

WATER ISOLATION VALVE
TAG P-269
170X60mm

SPRINKLER DRAIN
TAG P-270
80X40mm

APARTMENT MONITORED VALVE & FLOW SWITCH
TAG P-270
100X70mm

FIRE
TAG P-271
100X60mm

ALARM VALVE LOCK OPEN
TAG P-272
100X40mm

DO NOT OPEN REDUNDANT SERVICE
TAG P-273
100X35mm

SPRINKLER BOOSTER
TAG P-274
200X30mm

GREASE TRAP SUCTION POINT
TAG P-275
150X150mm

SCV
TAG P-276
120X65mm

NON-DRINKING WATER TAP TO BE UTILISED FOR THE FILLING OF MOP BUCKETS
TAG P-277
90X85mm

DRINKING WATER TAP TO BE UTILISED FOR THE FILLING OF TRAIN FRESH WATER TANKS
TAG P-278
90X85mm

JACKING PUMP
TAG P-279
110X20mm

Fire Australia Co Pty Ltd.
ABN No. 13165523713
47 Rushdale St. Knoxfield VIC-3180. Tel:(03) 9764 0020, Fax: (03) 9764 0023.
E-mail : sales@fireausco.com.au www.fireausco.com.au

All Tags below are available in polyproplene .

TANK SUPPLY VALVE LOCK OPEN
TAG P-280
100X40mm

BASEMENT/ GROUND FLOOR
TAG P-281
100X40mm

FIRE PUMP SUPPLY LOCK OPEN
TAG P-282
100X40mm

BOOSTER VALVE LOCK OPEN
TAG P-283
100X40mm

JACKING PUMP LOCK OPEN
TAG P-284
100X40mm

FIRE SERVICE ISOLATION VALVE LOCATED IN CEILING
TAG P-285
100X50mm

SEWER PUMP STATION STAGE 43
TAG P-286
100X50mm

JACKING PUMP PRESSURE SWITCH LOCK OPEN
TAG P-287
100X50mm

FLOW SWITCH TEST DRAIN
TAG P-288
100X50mm

ALARM VALVE LOCK OPEN
TAG P-289
80X40mm

COOKTOPS
TAG P-290
100X35mm

FILTER DO NOT DISCONNECT
TAG P-291
100X35mm

ELEVATOR SUMP SUCTION POINT
TAG P-292
100X35mm

HOT WATER
TAG P-293
100X35mm

SOLENOID TEST VALVE
TAG P-294
100X35mm

LOCKED OPEN
TAG P-295
90X30mm

FLOW SWITCH & ISOLATION VALVE 1
1-15
TAG P-296
100X30mm

ART GALLERY DRY PIPE SYSTEM
TAG P-297
135X35mm

TANK QUICK FILL VALVE NO. 7
TAG P-298
100X30mm

JACKING PUMP ISOLATION VALVE
TAG P-299
75X40mm

TENANCY STAIR SPRINKLER ISOLATION VALVE
TAG P-300
80X40mm

MAIN STOP VALVE
TAG P-301
75X40mm

TANK SUCTION VALVE LOCK OPEN
TAG P-302
100X30mm

HOT WATER DO NOT DISCONNECT
TAG P-303
100X30mm

SPRINKLER DRAIN VALVE
TAG P-304
100X100mm

VALVE ISOLATED DUE TO
TAG P-305
150X150mm

WATER ISOLATION VALVE
TAG P-306
170X60mm

SEWER PUMP STATION STAGE 43
TAG P-307
100X50mm

VALVE OVERHAUL COMPLETED
BY MAINTENANCE ESSENTIALS
TAG P-308
100X75mm

JACKING PUMP
TAG P-309
50X50mm

FIRE SERVICE ISOLATION VALVE
TAG P-310
100X40mm

Fire Australia Co Pty Ltd.
ABN No. 13165523713
47 Rushdale St. Knoxfield VIC-3180. Tel:(03) 9764 0020, Fax: (03) 9764 0023.
E-mail : sales@fireausco.com.au www.fireausco.com.au

FIRE AUSTRALIA CO

TAG M-1 (100 x 40mm)

TAG M-2 (100 x 40mm)

TAG M-5 (100 x 40mm)

TAG M-3 (80 x 40mm)

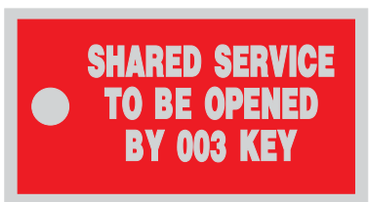

TAG M-4 (80 x 40mm)

SAMPLE ONLY

SAMPLE ONLY

SAMPLE ONLY

MISCELLANEOUS SIGNS

All signs below are available in Plastic, S/Adhesive and Galvanised metal powder coated and printed.

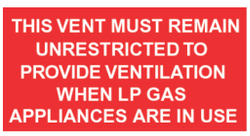

PT74
100x60mm
S/Adh Vinyl

PT75
190x190mm
Plastic

PT76
285x125mm
S/Adh vinyl

PT77
100 x100mm
S/Adh vinyl

PT78
230x95mm
S/Adh,Plastic

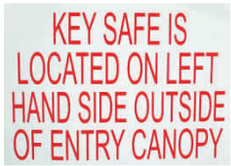

PT79
300x210mm
S/Adh vinyl

PT80
180x140mm
Metal

PT81
150x150mm
S/Adh Vinyl

PT82
150x150mm
S/Adh vinyl

PT83
150x150mm
Plastic

PT84
120x100mm
S/Adh vinyl

PT85
160x110mm
Plastic

PT86
160x110mm
Plastic

PT87
225x110mm
Plastic

PT88
300x100mm
Plas,S/Adh,Metal

PT89
300x100mm
Plas,S/Adh,Metal

PT90
300x75mm
Plastic

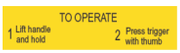

PT91
70x15mm
S/Adh Vinyl
Rolls of 500

PT92
150x150mm
Metal

PT92-A
150x150mm
Metal

PT93
300x225mm
S/Adh Vinyl

PT94
300x225mm
Metal

PT95
300x225mm
Plastic

PT97
420x300mm
Plas,S/Adh,Metal

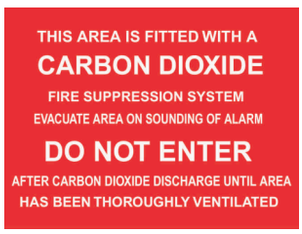

PT98
300x450mm
Plas,S/Adh,Metal

PT96 99
300x225mm

PT100
300x225mm

PT101
300x225mm

PT102
300x225mm

Fire Australia Co Pty Ltd.
ABN No. 13165523713
47 Rushdale St. Knoxfield VIC-3180. Tel:(03) 9764 0020, Fax: (03) 9764 0023.
E-mail : sales@fireausco.com.au www.fireausco.com.au

FIRE AUSTRALIA CO

ALUMINIUM Acid Etched Paint Filled Signs

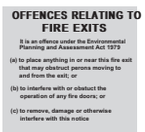

PA1
185x185mm

PA2
380x140mm

PA3
380x140mm

PA4
300x225mm

PA5
300x225mm

PA6
300x225mm

PA7
300x225mm

PA8
300x225mm

PA9
300x225mm

PA10
300x225mm

PA11
300x225mm

PA12
300x225mm

PA13
300x225mm

PA14
300x225mm

PA15
300x22 5mm

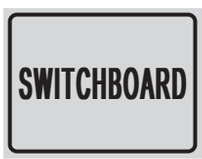

PA16
300x225mm

PA17
300x225mm

PA18
370x370mm

PA19
750x300mm

PA20
650x125mm

PA21
100x50mm

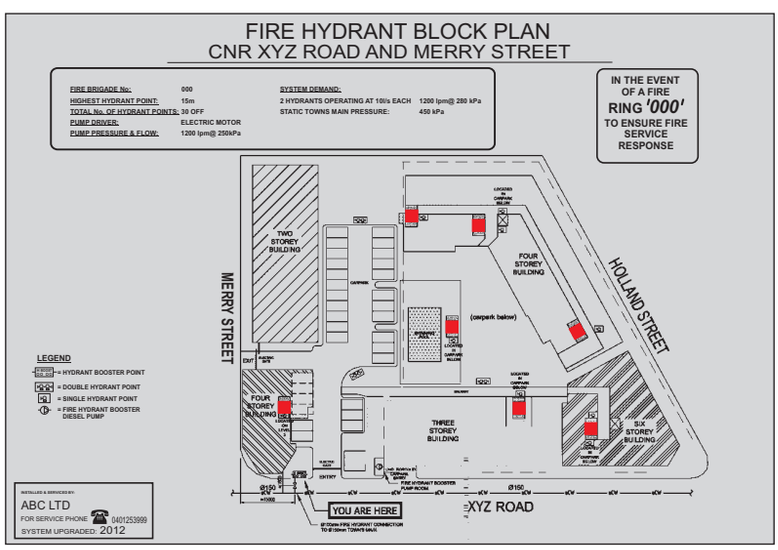

BLOCK PLANS (As per your requirement)

FIRE HOSE REEL | LOW PRESS. AIR | NATURAL GAS | PHOSPHORIC ACID
HYDRAULIC FLUID | FIRE SPRINKLERS | CAUSTIC SODA | DIESEL FUEL

FIRE

Carbon Dioxide Fire
Combined Hydrant & Sprinkler
Fire Alarms
Fire Fighting Water
Fire Foam
Fire Halon
Fire Hose Reel
Fire Hydrant
Fire Hydrant Rising Main
Fire Hydrant Water
Fire Protection Water
Fire Service
Fire Service Booster
Fire Service Pump
Fire Service Suction
Fire Sprinklers
Fire Sprinkler Booster
Fire Sprinklers Dry
Fire Sprinkler Water
Pre Action Fire Sprinklers
Sprinkler Suction
Stage 1
Stage 2
Stage 3
Tank Supply
Queen Lane Water Supply
Towns Main Supply
Combined Hydrant & Sprinkler Drain
Fire Service Drain Water
Fire Hydrant Water
Albert ST Water Supply
Zone 8 Booster
Zone 9
Boiler Flow
Boiler Return
Fire Drenchers
Redundant Pipework
Tank Pump Riser
Hydrant Riser
Fire Sprinkler System No.5
Towns Main 2 Water Supply
Fire Service Test Drain
Suction 2
Fire Sprinkler System No.1
Redundant Fire Service
Fire Deluge
Fire Hydrant Water

GASES

10% Methane
150 Butane
3% Hydrogen
90% Argon
97% Nitrogen
Acetylene
Ammonia
Argo Shield
Argon
Boiler Feed
Carbon Dioxide
Carbon Monoxide
Chlorine Gas
Gaseous Ammonia
Gaseous Nitrogen
Gaseous Oxygen
Helium
Hydrogen
Inergen
L.P. Gas
L.P. Gas A5
L.P. Gas kPa
Liquid Ammonia
Liquid Argon Liquid Chlorine
Liquid Nitrogen Liquid Oxygen
Medical Breathing Air
Medical Nitrous Oxide
Medical Oxygen
Medical Suction
Medical Vacuum
Methane
Natural Gas 100 kPa
Natural Gas 210 kPa
Natural Gas 7 kPa
Natural Gas kPa
Nitrogen
Nitrogen Oxide
Nitrous Oxide
Oxygen
Propane
Refrigerant
Refrigerant R12
Refrigerant R22
Spare Medical Gas
Synthetic Natural Gas
Tempered L.P. Gas kPa
Town Gas
UHP
Vent

ACID

Acid
Acidic Solution
Alkali
Alum Solution
Caustic
Caustic Soda
Chemical Dosing
Chemical Effluent
Chlorine
Chlorine Solution
Citric Acid
Cyanide
Cyanide Solution
Detergent
Dilute Acid
Dilute Caustic
Flocculent
Hydrazine
Hydrochloric Acid
Lime
Phosphate
Phosphoric Acid
Polyelectrolyte
Sodium Hydroxide
Sulphuric Acid

AIR

Compressed Air
Dry Compressed Air
Extraction Air
General Purpose Air
H.P. Instrument Air
High Pressure Air
Instument Air
L.P. Instrument Air
Low Pressure Air
Medical Air
Medical Breathing Air
Medical Suction
Plant Air
Relief Vent
Return Air
Return Air
Scour Air
Service Air
Starting Air
Supply Air
Vacuum Air
Vent Air

OIL

Alcohol
Diesel Fuel
Diesel Oil
Engine Oil
Fuel Oil
Fuel Oil Supply
Grease
Grease Pump Out
Heating Oil
Hot Oil
Hydraulic Fluid
Hydraulic Oil
Insul Oil Clean
Kerosene
Lube Oil Drain
Lubricating Oil
Mineral Turpentine
Mineral Turps
Oil
Oil Vent
Thinners
Waste Oil
White Spirit

Fire Australia Co Pty Ltd.
ABN No. 13165523713
47 Rushdale St. Knoxfield VIC-3180. Tel:(03) 9764 0020, Fax: (03) 9764 0023.
E-mail : sales@fireausco.com.au www.fireausco.com.au

FPA JAS-ANZ UL LISTED WaterMark UL NEN 3374 FM DIN BS:336

FIRE AUSTRALIA CO

WATER

Backwash
Black Water
Boiler Feed Water
Bore Water
Bore Water
Brine
Chilled Drinking Water
Chilled Water
Circulating Water
Cold Water
Cold Water Flow
Cold Water Return
Cold Water Rising Main
Condensate
Condenser Water
Cooling Water
De-Ionised Water
Deminerlised Water
Distilled Water
Domestic Cold Water
Domestic Hot Water
Domestic Water
Drain Water
Drinking Water
Effluent
E- Water Acid
E- Water Ambient Alkaline
E-Water Hot Alkaline
Feed Water
Filtered Water
Fire Fighting Water
Fire Foam
Fire Protection Water
Flusherette
Flushometer
Fresh Water
Flushing Valve Line
Fume Cupboard Spray
Grey Water
Heating Cooling Water
Heating Hot Water
Heating Water
High Pressure Hot Water
High Temprature Hot Water
Hot Water
Hot Water Flow
Hot Water Return
Lab Water
Landscaping Water
Low Temprature Hot Water
Mains Water
Make Up Water
No Potable Hot Water Return
Non Potable Cold Water
Non Potable Hot Water
Non Potable Hot Water Flow
Non Potable Water
Operating Water
Overflow
Overflow Water
Ocean Water
Process Water Return
Polluted Water
Potable Cold Water
Potable Hot Water
Potable Hot Water Flow
Potable Hot Water Return
Potable Water
Processed Water
Pumped Potable Water
Purified Water
Rain Water
Raw Water
Recycled Water
Return
Reverse Osmosis Water
Salt Water
Sample Water
Soft Water
Storm Water
Storm Water Rising Mains
Storm Water Over Flow
Sump Water
Supply
Supttonic Storm Water
Tempered Hot Water
Towns Main Water
Towns Water
Treated Water
Ultra Pure Water
Warm Water
Warm Water Flow
Warm Water Return
Waste Water
Water
Water Mist

STEAM

Blow Down
Boiler Feed
Exhaust
High Pressure Steam
Low Pressure Steam
Main Steam
Saturated Steam
Sealing Steam
Steam
Steam Condensate
Steam Drain
Steam Vent
Exhaust

ELECTRICAL

Consumer Mains
Electrical
Electrical Traced
Emergency Lighting
Fire Alarm
Sub Mains
Traffic Control

MISCELLANEOUS

Drains
Effluent
Laboratory Waste
Product
Sewage
Soil
Suction Discharge
Vent
Waste

COMMUNICATIONS

Data Transfer
Public Address
Telephones

TYPE	SIZE OF SERVICE	MAKER DIMENSIONS
L	75 MM & LARGER	400 MM X 50 MM
M	75 MM TO 50 MM	400 MM X 27 MM
Code Tape	40 MM & SMALLER	400 MM X 90 MM

Fire Australia Co Pty Ltd.
ABN No. 13165523713
47 Rushdale St. Knoxfield VIC-3180. Tel:(03) 9764 0020, Fax: (03) 9764 0023.
E-mail : sales@fireausco.com.au www.fireausco.com.au

FIRE HYDRANT BOOSTER

PVCL - 1
LH : 75mm
Height : 195mm
Width : 590mm

FIRE SAFETY DOOR
DO NOT OBSTRUCT
DO NOT KEEP OPEN

PVCL - 2
LH : 50mm
Height : 200mm
Width : 535mm

HYDRANT FH

PVCL - 3
LH : 75mm
Height : 140mm
Width : 655mm

ESSENTIAL SERVICES

PVCL - 4
LH : 55mm
Height : 185mm
Width : 330mm

SPRINKLER BOOSTER

PVCL - 5
LH : 95mm
Height : 250mm
Width : 585mm

SPRINKLER CONTROL VALVE INSIDE

PVCL - 6
LH :55mm
Height : 140mm
Width : 480mm

BRIGADE SUCTION

PVCL - 7
LH : 105mm
Height : 280mm
Width : 510mm

SUCTION POINT

PVCL - 8
LH : 95mm
Height : 410mm
Width : 260mm

FIRE SPRINKLER MAIN VALVE

PVCL - 9
LH : 65mm
Height : 175mm
Width : 560mm

SERVICES RISER

PVCL - 10
LH : 75mm
Height : 210mm
Width : 400mm

ELECTRICAL SWITCHBOARD

PVCL - 11
LH :50mm
Height : 125mm
Width : 195mm

TANK SUCTION POINT

PVCL - 12
LH : 50mm
Height : 160mm
Width : 430mm

FIRE DOOR
DO NOT OBSTRUCT
DO NOT KEEP OPEN

PVCL - 13
LH : 50mm
Height : 200mm
Width : 650mm

FIRE DOOR
DO NOT OBSTRUCT

PVCL - 14
LH : 50mm
Height : 130mm
Width : 540mm

FIRE DOOR
DO NOT OBSTRUCT
DO NOT KEEP OPEN

PVCL - 15
LH : 30mm
Height : 125mm
Width : 440mm

FIRE DOOR
DO NOT OBSTRUCT
DO NOT KEEP OPEN

PVCL - 16
LH : 50mm & 20MM
Height : 135mm
Width : 350mm

FIRE SAFETY DOOR
DO NOT OBSTRUCT
DO NOT KEEP OPEN

PVCL - 17
LH : 45mm & 30
Height : 185mm
Width : 375mm

FIRE EXTINGUISHER
FIRE HOSE REEL

PVCL - 18
LH : 50mm
Height : 120mm
Width : 600mm

FIRE SAFETY DOOR
DO NOT OBSTRUCT
DO NOT KEEP OPEN

PVCL - 19
LH : 30mm
Height : 140mm
Width : 360mm

FIRE HYDRANT
FIRE HOSE REEL

PVCL - 20
LH : 50mm
Height : 125mm
Width : 550mm

FIRE HYDRANT
FIRE HOSE REEL

PVCL - 21
LH :50mm
Height : 125mm
Width : 530mm

FIRE SAFETY DOOR
DO NOT OBSTRUCT

PVCL - 22
LH :50mm
Height : 110mm
Width : 540mm

FIRE DOOR
DO NOT OBSTRUCT

PVCL - 23
LH : 50mm
Height : 110mm
Width : 450mm

FIRE SMOKE DOOR
DO NOT OBSTRUCT
DO NOT KEEP OPEN

PVCL - 24
LH :35mm
Height : 105mm
Width : 450mm

FIRE HYDRANT

PVCL - 25
LH :75mm
Height : 75 mm
Width : 610mm

FIRE HYDRANT

PVCL - 26
LH :50mm
Height : 50 mm
Width : 495mm

FIRE HYDRANT

PVCL - 27
LH : 75mm
Height : 75mm
Width : 665mm

WIP INSIDE

PVCL - 28
LH :40mm
Height : 40 mm
Width : 275mm

Fire Australia Co Pty Ltd.
ABN No. 13165523713
47 Rushdale St. Knoxfield VIC-3180. Tel:(03) 9764 0020, Fax: (03) 9764 0023.
E-mail : sales@fireausco.com.au www.fireausco.com.au

FIRE AUSTRALIA CO

COMBINED FIRE HYDRANT AND SPRINKLER BOOSTER
PVCL - 29
LH : 50mm
Height : 50mm
Width : 1550mm

FIRE HYDRANT
PVCL - 30
LH :75mm
Height : 75 mm
Width : 610mm

SPRINKLER BOOSTER CONNECTION
PVCL - 31
LH : 55mm
Height : 55mm
Width : 1030mm

HYDRANT AND SPRINKLER ROOM
PVCL - 32
LH :50mm
Height : 50 mm
Width : 930mm

FIRE SAFETY DOOR DO NOT OBSTRUCT DO NOT KEEP OPEN
PVCL - 33
LH : 20mm
Height : 85mm
Width : 280mm

FIRE PUMP ROOM
PVCL - 34
LH : 75mm
Height : 75mm
Width : 730mm

FIRE HOSE REEL
PVCL - 35
LH : 75mm
Height : 75mm
Width : 780mm

HYDRANT BOOSTER
PVCL - 36
LH :75mm
Height : 75 mm
Width : 860mm

FIRE EXTINGUISHER
PVCL - 37
LH : 50mm
Height : 50mm
Width : 670mm

FIRE EXTINGUISHER
PVCL - 38
LH : 40mm
Height : 40mm
Width : 440mm

SPRINKLER BOOSTER
PVCL - 39
LH : 75mm
Height : 75mm
Width : 1150mm

NO PARKING
PVCL - 40
LH : 90mm
Height : 90mm
Width : 560mm

FIRE HOSE REEL
PVCL - 41
LH : 50mm
Height : 50mm
Width : 450mm

MID LEVEL COMBINED SPRINKLER HYDRANT RISER
PVCL - 42
LH : 50mm
Height : 50mm
Width : 970mm

HYDRANT
PVCL - 43
LH : 100mm
Height : 100mm
Width : 550mm

BOOSTER
PVCL - 44
LH : 100mm
Height : 100mm
Width : 550mm

HYDRANT BOOSTER
PVCL - 45
LH : 75mm
Height : 75mm
Width : 860mm

FIRE BOOSTER CUPBOARD
PVCL - 46
LH : 50mm
Height : 50mm
Width : 730mm

HYDRANT GEAR
PVCL - 47
LH : 50mm
Height : 50mm
Width : 600mm

FIRE INDICATOR PANEL
PVCL - 48
LH : 50mm
Height : 50mm
Width : 770mm

FIRE INDICATOR PANEL
PVCL - 49
LH : 50mm
Height : 50mm
Width : 790mm

EXTERNAL BOOSTER
PVCL - 50
LH : 50mm
Height : 50mm
Width : 590mm

DO NOT OBSTRUCT
PVCL - 51
LH : 50mm
Height : 50mm
Width : 520mm

FIRE HYDRANT & HOSE
PVCL - 52
LH : 50mm
Height : 50mm
Width : 630mm

HYDRANT BOOSTER
PVCL - 53
LH : 50mm
Height : 50mm
Width : 570mm

HEAVY DOR
PVCL - 54
LH :40mm
Height : 100mm
Width : 400mm

EMERGENCY INFORMATION
PVCL - 55
LH : 45mm
Height : 130mm
Width : 270mm

FEED HYDRANT
PVCL - 56
LH : 50mm
Height : 135mm
Width : 275mm

ESSENTIAL SERVICES LOG BOOKS
PVCL - 57
LH : 30mm
Height : 130mm
Width : 185mm

MFB PHONE INSIDE
PVCL - 58
LH : 75mm
Height : 280mm
Width : 280mm

FIRE HYDRANT & HOSE
PVCL - 59
LH : 80mm
Height : 440mm
Width : 435mm

Fire Australia Co Pty Ltd.
ABN No. 13165523713
47 Rushdale St. Knoxfield VIC-3180. Tel:(03) 9764 0020, Fax: (03) 9764 0023.
E-mail : sales@fireausco.com.au www.fireausco.com.au

SMOKE DOOR
DO NOT OBSTRUCT

PVCL - 64
LH :30mm
Height : 70mm
Width : 355mm

SMOKE DOOR
DO NOT OBSTRUCT

PVCL - 65
LH :25mm
Height : 75mm
Width : 385mm

SMOKE DOOR
DO NOT OBSTRUCT

PVCL - 65
LH :30mm
Height : 75mm
Width : 260mm

SMOKE DOOR
DO NOT OBSTRUCT

PVCL - 65
LH :30mm
Height : 75mm
Width : 390mm

CLEANER

PVCL - 60
LH : 50mm
Height : 50mm
Width : 320mm

FIRE (SAFETY) DOOR
DO NOT OBSTRUCT
DO NOT KEEP OPEN

PVCL - 67
LH : 20mm
Height : 85mm
Width : 280mm

SMOKE DOOR
DO NOT OBSTRUCT
DO NOT KEEP OPEN

PVCL - 62
LH : 25mm
Height : 105mm
Width : 350mm

FIRE DOOR
DO NOT OBSTRUCT
DO NOT KEEP OPEN

PVCL - 62
LH : 25mm
Height : 120mm
Width : 360mm

FIRE DOOR
DO NOT OBSTRUCT
DO NOT KEEP OPEN

PVCL - 62
LH : 25mm
Height : 120mm
Width : 360mm

FIRE SAFETY DOOR
DO NOT OBSTRUCT
DO NOT KEEP OPEN

PVCL - 66
LH : 20mm
Height : 85mm
Width : 280mm

FIRE DOOR
DO NOT OBSTRUCT
DO NOT KEEP OPEN

PVCL - 62
LH : 50mm & 21mm
Height : 140mm
Width : 350mm

FIRE SAFETY DOOR
DO NOT OBSTRUCT
DO NOT KEEP OPEN

PVCL - 66
LH : 30mm
Height : 140mm
Width : 360mm

FIRE HYDRANT
BOOSTER

PVCL - 66
LH : 50mm
Height : 115mm
Width : 405mm

FIRE DOOR
DO NOT OBSTRUCT
DO NOT KEEP OPEN

PVCL - 62
LH : 25mm
Height : 115mm
Width : 390mm

FIRE HYDRANT

PVCL - 61
LH : 50mm
Height : 50mm
Width : 485mm

EMERGENCY
INFORMATION

PVCL - 63
LH :25mm
Height : 85mm
Width : 310mm

FIRE (SAFETY) DOOR
DO NOT OBSTRUCT
DO NOT KEEP OPEN

PVCL - 66
LH : 25mm
Height : 100mm
Width : 350mm

SMOKE DOOR DO NOT OBSTRUCT
DO NOT KEEP OPEN

PVCL - 62
LH : 30mm
Height : 71mm
Width : 665mm

FIRE

PVCL - 66
LH : 50mm
Height : 70mm
Width : 170mm

EMERGENCY
INFORMATION

PVCL - 63
LH : 55mm
Height : 150mm
Width : 295mm

FIRE
PUMP

PVCL - 66
LH : 120mm
Height : 315mm
Width : 385mm

HYDRANT
BOOSTER

PVCL - 66
LH : 95mm
Height : 250mm
Width : 500mm

SMOKE DOOR
DO NOT OBSTRUCT

PVCL - 62
LH : 50mm
Height : 130MM
Width : 660mm

Fire Australia Co Pty Ltd.
ABN No. 13165523713
47 Rushdale St. Knoxfield VIC-3180. Tel:(03) 9764 0020, Fax: (03) 9764 0023.
E-mail : sales@fireausco.com.au www.fireausco.com.au

3000LB FITTINGS 142 - 154

ADAPTORS
- B.I. (British Instantaneous) 235-237
- Brass Screwed BSP - Male / Female 122, 253
- Brazing - Copper Alloy 35 & 192
- CFA, MFB, NSW, QRT, SA X BSP - Forged Brass 221-223, 225-226 & 228
- CFA, MFB, NSW, QRT, SA X BSP - Forged Aluminium 224, 227-231
- Copper Flange 174
- Coventry - Suction Point 243
- Roll Groove x BSP 74, 79, 86
- Storz 203 - 212

ALUMINIUM
- Adaptors-CFA, MFB, NSW, QRT, SA X BSP 224, 227-231
- Adaptors - B.I. (British Instantaneous) 236
- Camlock Fittings 245 - 248
- Cap - B.I. (British Instantaneous) 238
- Caps - CFA, MFB, NSW, QRT, SA 232
- Cap - Storz 207, 232
- Couplings - B.I. (British Instantaneous) 233, 234
- Couplings - Male/Female to Hose Tail, QRT, SA 218
- Coupling Sets - B.I. (British Instantaneous) 234
- Coupling Sets - CFA, MFB, NSW, QRT, SA 220
- Directors - B.I. X BSP 237, 239
- Dividers 216
- Forestry (Quick Connect) Couplings 240 - 242
- Nipples 200 - 202
- Nozzles 237 & 239
- Plug - B.I. (British Instantaneous) 238
- Plugs - CFA, MFB, NSW, QRT, SA 232
- Standpipes 213 - 215
- Storz Fittings 203 - 207
- Storz Tree 27, 212
- Suction Strainer 243
- Tank Cap 243

ANTI VORTEX PLATE 64

BALL VALVES
- Brass - General Industry 41, 42
- Brass - Dual Approved 43
- Mini 42
- PVC 49
- Stainless Steel 45
- 3 Way - Brass 43
- 3 Way - Stainless 47

BARREL NIPPLES
- Black Steel 95
- Gal Steel 107
- Stainless Steel 108

BAUER STYLE COUPLIINGS 249, 250

BENDS
- Black Steel 98, 99
- Galvanised Malleable 88, 89
- Galvanised Steel 105

B. I. (BRITISH INSTANTANEOUS) FORGED FITTINGS
- Adaptors - Aluminium, Brass, Stainless Steel 235 - 237
- Caps - Aluminium, Brass, Stainless Steel 238
- Couplings - Aluminium, Brass, Stainless Steel 233
- Coupling Sets - Aluminium, Brass, Stainless Steel 234
- Director - Aluminium, Brass, Plastic 237 & 239
- Plugs - Aluminium, Brass, Stainless Steel 238
- Washer for BI Female - Rubber 238

BLACK STEEL BSP FITTINGS
- Backnuts (locknuts) 102
- Barrel Nipples 95
- Bends 98, 99
- Bushes 96
- Caps 101
- Crosses 102
- Elbows 97, 98 & 101
- Half Sockets 97
- Nipples Hexagon 95
- Nipples Hexagon - Reducing 96
- Plugs Hex Head 100
- Sockets 97
- Sockets - Reducing 101
- Tees 99
- Toe (pipe) Nipple Threaded One End BSPT 102
- Unions 100

INDEX

BOOSTER HEADS & ACCESSORIES 34-35 & 191-192
BORE CAPS 268
BRASS
Adaptors - BSP 122, 253
Adaptors - B.I. (British Instantaneous) 235
Adaptors - CFA, MFB, NSW, QRT,
SA X BSP - Forged Brass 221-223, 225-226, 228
Allthread - BSP 123,254
Ball Valves 41 - 43
Bibcock 42
Brazing - Copper Alloy Adaptors 35 & 192
Bushes - BSP 122 & 253
Caps - BSP 122, 253
Cap - B.I. (British Instantaneous) 238
Caps - CFA, MFB, NSW, QRT, SA 232
Cap - Hex 122 & 253
Cap - Storz 238
Check Valves - BSP 44
Couplings - B.I. (British Instantaneous) 233
Coupling - Male / Female to Hose Tail, QRT, SA 217
Coupling Sets - B.I. (British Instantaneous) 234
Coupling Sets 219
Check Valves - BSP 44
Director - B.I 239
Elbows - BSP 122, 123 & 253, 254
Foot Valve - BSP 44
Gate Valves - BSP 41
Hose Barbs (Tails) 251, 252
Hydrant Valves 37, 38,195,196
Locknuts (Backnuts) - BSP 123, 254
Nipples - Fire Brigade Threads to BSP 202
Nipples Hexagon - BSP 123, 254
Nipples Hexagon Reducing - BSP 124, 255
Nozzles 239, 257
Nuts & Tails 251, 252
Plugs Hex Head - BSP 124, 255
Plug - B.I 238
Sockets - BSP 124, 255
Sockets Reducing - BSP 125, 256
Storz 203 - 211
Tees - BSP 125, 256
Unions - BSP 125, 256
Y Strainer - BSP 44

BRONZE
Globe Valves 49
Lift Check Valves 49

BSM (BRITISH STANDARD MILK) FITTINGS 116 - 119

BUSHES
3000LB High Pressure 142, 143
Black Steel 96
Brass 122, 253
Galvanised Malleable 87
Galvanised Steel 104
Stainless Steel 109

BUTTERFLY VALVES
Lugged Style - Gear Operated 32
Lugged Style - Lever 40
Roll Groove 31
Wafer Style - Gear Operated 32
Wafer Style - Lever 40

BUTTWELD FITTINGS-CARBON STEEL
Caps 131, 135
Elbows 126, 127, 132, 133, 134
Extra Strong 134, 137
Reducers-Concentric/Eccentric 128-129, 132-133, 136-137
SGP 132, 133
Standard Weight 126 - 131
Tees 130, 133, 135

BUTTWELD FITTINGS-STAINLESS STEEL 316
Caps - Sch.10 & Sch.40 139
Elbows - Sch.10 & Sch.40 140, 141
Reducers Concentric / Eccentric
- Sch. 10 & Sch. 40 138, 139
Tees - Sch.10 & Sch.40 141

CABINETS 181 - 188
Cabinet Accessories 187
Extinguisher & Manifest Cabinets 185 - 187
Hose Reel Cabinets 184
Hydrant & Booster Cabinets 181 - 183
Sprinkler Cabinets 188

Fire Australia Co Pty Ltd.
ABN No. 13165523713
47 Rushdale St. Knoxfield VIC-3180. Tel:(03) 9764 0020, Fax: (03) 9764 0023.
E-mail : sales@fireausco.com.au www.fireausco.com.au

CAMLOCK FITTINGS

Aluminium	245 - 248
Polypropylene	245 - 248
Stainless Steel	245 - 248

CAPS

3000LB High Pressure	143, 144
B.I. (British Instantaneous)	238
Black Steel	101
Bore Cap	268
Brass - BSP	122, 253
Buttweld - Carbon Steel	131, 135
Buttweld - Stainless Steel	139
CFA, MFB, NSW, QRT, SA	232
Galvanised Malleable	90
Galvanised Steel	107
Roll Groove	73, 79
Stainless Steel - BSP	114
Storz	207 & 211

CARBON STEEL

3000LB High Pressure	142 - 154
Buttweld Fittings	126 - 137
Flanges	155 - 163
Pipe	65, 66

CAST IRON

Butterfly Valves	40
Check Valves - Flanged	39
Gate Valves	39
Y Strainers	39

CHECK VALVES

Brass - Europa Spring - BSP	44
Brass Swing - BSP	44
Bronze - Lift (Piston)	49
Cast Iron Swing - Flanged	39
Roll Groove	32, 33
Stainless Steel - 3 Pce Spring BSP	46
Stainless Steel - Swing BSP	46
Wafer Duo	40

CLAMPS

Galvanised - Double Bolted To Suit Pipe	78
Galvanised - Weldnut To Suit Pipe	68
Heavy Duty Hose Clamp T-Bolt	199
Stainless Steel - Double Bolted To Suit Tube	69
Stainless Steel - Double Bolted To Suit Pipe	69
Stainless Steel - Interlocking & T-Slot To Suit Tube	68
Worm Drive - Zinc Plated & Full Stainless Steel	198

COMBINATION (KING) NIPPLES 265

COUPLINGS (also see sockets)

3000LB High Pressure	144 -147
Aluminium - Male / Female to Hose Tail, QRT, SA	218
Brass - Male/Female to Hose Tail, QRT	217
Plastic - Male/Female to Hose Tail, QRT	218
Stainless Steel - Male / Female to Hose Tail, QRT	217
Storz	203 & 208

COVENTRY ADAPTORS - SUCTION POINT 243

CROSSES

3000LB High Pressure	147
Black Steel	102
Galvanised Malleable	93

DENSO PRODUCT 269

DUCTILE IRON

Antivortex Plate	64
Butterfly Valves	31 - 32
Butterfly Valves - Roll Groove	31
Check Valves - Flanged	33
Check Valves - Roll Groove	32, 33
Gate Valves - Flanged	29, 30
Gate Valves - Roll Groove	29, 30
Roll Groove Fittings	70 - 75

INDEX

ELBOWS

3000LB High Pressure	148, 149
Brass - BSP	122, 123, 253, 254
Black Steel	97, 98 & 101
Buttweld - Carbon Steel	126, 127, 132, 133, 134
Buttweld - Stainless Steel	140, 141
Galvanised - Flanged	82, 83
Galvanised Malleable	89, 90, 93
Galvanised Steel	105
Roll Groove	71, 76, 77
Stainless Steel - BSP	111, 112
Tube	177

FERRULE (Triclover Style) FITTINGS

Clamps	119
End Caps	120
Ferrules	120
Seals (Gaskets)	120, 121

FIRE HOSE REELS & ACCESSORIES 197

FIRE SERVICE VALVES 29 - 33

FIRE SYSTEMS 1 - 26

FITTINGS

3000LB High Pressure	142 - 154
Brass - BSP	122 - 125
Black Steel	95 - 102
BSM Stainless Steel	116 - 119
Buttweld - Carbon Steel	126 - 137
Buttweld - Stainless Steel	138 - 141
Galvanised Malleable	87 - 94
Galvanised Steel	103 - 107
Roll Groove	70 - 79
Stainless Steel	108 - 115
Storz	203 - 211
Tube	177 - 179

FLANGE ADAPTORS

Copper	174
Roll Groove - Ductile Iron	70
Roll Groove - Stainless Steel	78

FLANGES - CARBON STEEL

ANSI 150	161
ANSI 300	162
ANSI 600	163
DIN 16, 25-40, 40	158 - 160
Galvanised Malleable	94
Table D	155
Table E	155, 156
Table H	156, 157

FLANGES - STAINLESS STEEL

ANSI 150	166, 167
DIN 16	168
Table D	164
Table E	164, 165

FOOT VALVES

Brass - BSP	44
Galvanised - Flanged	85
Stainless Steel - Flanged	85

GALVANISED - FLANGED FITTINGS

Elbows	82, 83
Pipe	84
Reducers	80, 81
Tees	80, 81

GALVANISED MALLEABLE FITTINGS

Backnuts (locknuts)	93
Bends	88, 89
Bushes	87
Caps	90
Crosses	93
Elbows	89, 90
Flanges	94
Nipples Hexagon	90
Nipples Hexagon - Reducing	91
Plugs	94
Sockets	91
Sockets - Reducing	92
Tees	92
Tees - Reducing	92
Unions	93

GALVANISED PIPE PIECES 56 - 62

Fire Australia Co Pty Ltd.
ABN No. 13165523713
47 Rushdale St. Knoxfield VIC-3180. Tel:(03) 9764 0020, Fax: (03) 9764 0023.
E-mail : sales@fireausco.com.au www.fireausco.com.au

GALVANISED STEEL FITTINGS
- Barrel Nipples 107
- Bends 105
- Bushes 104
- Caps 107
- Elbows 105
- Nipples Hexagon 103
- Nipples Hexagon - Reducing 103
- Plugs - Hex Head 106
- Sockets 104
- Tees 106
- Unions 106

GASKETS
- Fibre - Full Face & Ring 170 - 172
- Rubber - Full Face 169
- Spiral Wound 173

GATE VALVES
- Brass - General Industry BSP 41
- Brass - DR Approved BSP 41
- Cast Iron - Flanged 39
- Flanged Resilient Seat 29, 30
- Knife 48
- Roll Groove 29, 30

GLOBE VALVES
- Bronze - BSP 49

HIGH PRESSURE -3000 lb FITTINGS
- Bushes 142, 143
- Caps 143, 144
- Couplings - Full 144, 145
- Couplings - Half 145, 146
- Couplings - Reducing 146, 147
- Crosses 147
- Elbows 148,149
- Nipples - Hexagon 149,150
- Nipples - Reducing 150,151
- Nipples -Crossover NPT/BSPT 151
- Plugs 151, 152
- Tees 152, 153
- Unions 143, 154
- Outlets - Threaded / Socket Weld 154

HOSES 258 -265

HOSES CLAMPS 198-199

HOSE JOINERS 265

HOSE TAILS (Barbs)
- Brass M.I - BSP 251
- Stainless M.I - BSP 114

HYDRANT SYSTEMS & RISERS
- Hydrant Key 33, 215
- Hydrant Risers 51 - 55
- Hydrant Systems - VIC/TAS 1 to 18
- Hydrant Systems - NSW 19, 20
- Hydrant Systems - QLD 21, 22
- Hydrant Systems -SA 23, 24
- Hydrant Systems - WA 25, 26
- Tank Suction Assembly 27 & 64

HYDRANT / SLUICE KEYS 215

HYDRANT VALVES (MILLCOCKS / LANDING VALVES) 36-38, 194-196

ISOLATION MOUNTS - RUBBER 267

KING (COMBINATION) NIPPLES 265

KNIFE GATE VALVES 48

LANDING VALVES (HYDRANT VALVES / MILLCOCKS) 36-38, 194-196

LUBRICANT - ROLL GROOVE 269

MILLCOCKS (HYDRANT/LANDING VALVES) 36-38, 194-196

NIPPLES
- Aluminium 200 - 202
- 3000LB High Pressure 149,150, 151
- Black Steel 95, 96
- Brass - BSP 122
- Galvanised Malleable 90, 91
- Galvanised Steel 103
- Stainless Steel 108, 109
- TOE - Black Steel 102
- TOE - Stainless Steel 114
- TOE - Tube 179

NOZZLES / DIRECTORS 237, 239

INDEX

NUTS & TAILS - BRASS 251, 252

PIPE
- Galvanised - Flanged 84
- Galvanised - Light Wall Roll Groove 64
- Galvanised - Medium Wall Plain End 65
- Galvanised - Medium Wall Roll Groove 64
- Carbon Steel - ERW 65
- Carbon Steel - Seamless 66
- Stainless Steel - Sch.10 67
- Stainless Steel - Sch.40 67

PLASTIC
- Caps - CFA, MFB, NSW, QRT, SA 232
- Cap - Storz 207 & 232
- Couplings -Male/Female to Hose Tail, CFA, MFB 218
- Director 239
- Plugs - CFA, MFB, NSW, QRT, SA 232
- Plugs - B.I 238
- Nozzles 239

PIPE PIECES
- Galvanised - Medium Screwed Both Ends -BSP 56-62
- Galvanised Pipe Supports & Pipe Flanges 27
- Stainless Steel -Sch.40 -Screwed Both Ends- BSP 63, 115

PLUGS
- 3000LB High Pressure 151, 152
- Black Steel 100
- Brass 124, 255
- British Instantaneous 238
- CFA, MFB, NSW, QRT, SA 232
- Galvanised Malleable 94
- Galvanised Steel 106
- Stainless Steel 113

PRESSURE GAUGES 35, 192, 193

REDUCERS
- Buttweld - Carbon Steel 128, 129, 132, 133, 136, 137
- Buttweld - Stainless Steel 138, 139
- Galvanised - Flanged 80, 81
- Roll Groove 72, 78
- Storz 207, 211
- Tube 178, 179

ROLL GROOVE DUCTILE IRON FITTINGS
- Adaptors - Galvanised 74
- Adaptors - Stainless Steel 79
- Caps Blank - Galvanised 73
- Caps Blank - Stainless Steel 79
- Caps Test - Galvanised 74
- Concentric Reducer - Galvanised 72
- Concentric Reducer - Stainless Steel 78
- Couplings Rigid - Galvanised 74
- Couplings Rigid - Stainless Steel 76
- Couplings Flexible - Stainless Steel 76
- Eccentric Reducer - Galvanised 72
- Elbow 45°- Galvanised 71
- Elbow 45°- Stainless Steel 76
- Elbow 90°- Galvanised 71
- Elbow 90°- Stainless Steel 77
- Equal Tee - Galvanised 71
- Flange Adaptors - Galvanised 70
- Flange Adaptors - Stainless Steel 78
- Pipe Clamps - Galvanised 68
- Tee 25 BSP Outlet - Galvanised 72
- Tee Bull Head - Galvanised 73
- Tee Bull Head Standard for NSW - Galvanised 73
- Tee Bull Head Standard for QLD - Galvanised 73
- Tee End Run 100 R/G X 80 R/G - Galvanised 73
- Tee Equal - Stainless Steel 77
- Tee Hydrant-35°Offset - Galvanised 73
- Tee Hydrant Stack - Galvanised 70
- Tee Mechanical Grooved Outlet - Galvanised 75
- Tee Mechanical Threaded Outlet - Galvanised 75
- Tee Reducing 45°Offset Stack - Galvanised 70
- Tee Reducing - Galvanised 71
- Tee Reducing - Stainless Steel 77
- Tee Reducing Hydrant Hose Reel With 25 BSP (F)-Gal 70

RUBBER BELLOWS (Vibration Eliminators)
- Table E - Flanged 267
- DIN 16 / Table E - Flanged 267

SLUICE / HYDRTANT KEYS 215

SPANNERS
- Storz 207

SPRING MOUNTS 267

Fire Australia Co Pty Ltd.
ABN No. 13165523713
47 Rushdale St. Knoxfield VIC-3180. Tel:(03) 9764 0020, Fax: (03) 9764 0023.
E-mail : sales@fireausco.com.au www.fireausco.com.au

SOCKETS (also see couplings)

3000LB High Pressure	144 - 147
Black Steel	97
Brass	124, 125
Galvanised Malleable	91, 92
Galvanised Steel	104
Stainless Steel	110

STAINLESS STEEL

Ball Valves	45, 47
Barrel Nipples	108
Bushes - BSP	109
Camlock Fittings	245 - 248
Caps - Buttweld	139
Caps - BSP	114
Check Valves	46
Elbows - BSP	111, 112
Elbows - Buttweld	140, 141
Filters	47
Flanges - ANSI 150	166, 167
Flanges - DIN	168
Flanges - Table D	164
Flanges - Table E	164, 165
Foot Valves - Flanged	85
Hose Barbs (Tails) - BSP M.I.	114
Hydrant Valves	36, 37 & 194,195
Nipples Hexagon - BSP	108
Nipples Hexagon Reducing - BSP	109
Pipe Pieces - Sch.40 - Screwed Both Ends - BSP	115
Plugs Hex Head - BSP	113
Reducers - Buttweld	138, 139
Reducers - Tube	178, 179
Sockets - BSP	110
Sockets Reducing - BSP	110
Tees - Buttweld	141
Tees - BSP	112
Tees - Tube	177
TOE (PIPE) Nipples	114
TOE Nipples (Tube)	115
Tube Bend	177
Unions	113
Wire Stainer	243
Y Strainer - BSP	46

STANDPIPES

STENCIL VINYL CUT LETTER 300-302

FIRE HYDRANT STANDPIPES

PLUMBING STANDPIPES 213 - 215

TEES

3000LB High Pressure	152, 153
Brass - BSP	125, 256
Black Steel	99
Buttweld - Carbon Steel	130, 133, 135
Buttweld - Stainless Steel	141
Galvanised Malleable	92
Galvanised - Flanged	80, 81
Galvanised Steel	106
Roll Groove	70-73, 77
Stainless Steel - BSP	112
Tube	177

THREAD SEALANTS 268

TUBE & TUBE FITTINGS

Stainless Steel	177 - 179

UNDERGROUND HYDRANT / SLUICE KEYS 215

UNIONS

3000LB High Pressure	153, 154
Brass - BSP	125, 256
Black Steel	100
Galvanised Malleable	93
Galvanised Steel	106
Stainless Steel - BSP	113

VALVES

Ball	41, 42, 43, 45, 47, 49
Butterfly	31, 32, 40
Check	32, 33, 39, 40, 44, 46, 49
Foot	44, 85
Gate	29, 30, 39, 41
Globe	49
Hydrant (Millcocks / Landing)	36-38 & 194-196
Knifegate	48
PVC Ball	49
Roll Groove	29 - 31

VIBRATION ELIMINATORS (Rubber Bellows)

Table E - Flanged	267
DIN 16 / Table E - Flanged	267

VINYL CUT LETTER (STENCIL) 300-302

WYE DIVIDERS 216

Y STRAINERS

Brass - BSP	44
Cast Iron - Flanged	39
Stainless Steel - BSP	46

CONDITIONS OF SALE

DEFINITIONS

"Company" is Fire Australia Co Pty Ltd

A.B.N. 13 165 523 713 of Factory 5, 47 Rushdale St, Knoxfield VIC 3180 trading under its own name or the trading name shown on the face of this invoice.

"Contract" in the contract for the sale of the Goods formed by the acceptance of the order for the Goods.

"Customer" in the person, firm, corporation or other body to whom this invoice is addressed.

"Goods" are the items the subject of the sale under the Contract specified on the face of this invoice or where the context so admits being part of them.

1. GENERAL

1.1 The following are the terms and conditions of sale for the Goods unless the sale results from a written quotation in which case the terms and conditions appearing on the Company's quotation form shall prevail in the case of any inconsistency PROVIDED HOWEVER that if any of these terms and conditions contravenes or is prohibited by any law or statute for the time being in force (or which may come into force) including (but not limited) the Trade Practices Act 1974 (as amended) such terms or conditions shall not apply to the Contract but the remaining terms and conditions shall continue in full force and effect.

2. TERMS OF PAYMENT

2.1 Net cash within 30 days from the end of the month in which the invoice was issued.

2.2 Interest at the rate of 20% per annum or at the maximum rate of interest permitted by law from time to time (whichever is the lesser) shall be payable by the Customer on all principal amounts due and owing to the Company, such interest to be calculated on the daily balance and to be payable on demand. The Customer's obligation to pay the outstanding principal amount on the date it becomes for payment is not affected by this condition.

2.3 All losses, expenses, interest and costs including (but not limited to) legal fees consequent upon the Customer's failure to pay on the due date shall be recoverable from the Customer by the Company as liquidated damages.

3. CLAIMS, RETURNS AND ALLOWANCES

3.1 Any claim against the Company must be made within 7 days of delivery of the Goods except claims arising from non delivery which must be made In writing within 14 days from the date of the invoice. All claims must refer to the official invoice number and date and state the reason for the claim.

3.2 All freight charges for the return of Goods by the Customer shall be paid by the customer unless the Company expressly agrees in writing to accept liability for such charges.

3.3 Goods returned for credit will only be accepted if received in original condition and may be subject to restocking charges. The following types of Goods cannot be returned for credit under any circumstances -

(a) Any goods specially cut to length.

(b) Any goods specifically made, plated or otherwise treated or purchased for the Customer.

(c) Any goods damaged or altered in any way by the Customer.

3.4 Acceptance of delivery of the Goods returned for credit does not signify agreement to issue a credit note. A credit note will be issued at the Company's direction and only after the Goods have been inspected and found to be satisfactory in the opinion of the Company. In the event that a credit note is not issued, the Customer will be advised and the Goods made available for collection by the Customer.

3.5 Without prejudice to Condition 3.4, the Company will accept no responsibility whatsoever for any loss arising as a result of the Company's failure to give credit or its delay in so doing.

4. LIABILITY

4.1 Unless expressly agreed to the contrary by the Company in writing, the provisions and tolerances contained in the standard specifications to which the Goods are manufactured by the Company or its suppliers will apply to all orders accepted.

4.2 Unless the Company otherwise agrees in writing, at the request of the Customer, delivery of the Goods shall take place at the Company's premises. In the event that the Company agrees to deliver the Goods to the Customer at the Customer's address or to some other place nominated by the Customer, the Company shall be deemed to be A COMMON CARRIER and the Company shall not be under any liability, whether in tort or contract or otherwise for any loss or damage to or deterioration of the Goods or for misdelivery or failure to deliver or delay in delivery of or any other loss or damage suffered by the Customer whether caused by negligence or wilful misconduct of the Company by any other cause whatsoever including (but not limited to) any act of God, flood, fire, lightning, storm, tempest, rain, enemy hostilities, strikes, lock outs or other industrial disturbances, riots, laws, rules or regulations, inability to obtain equipment or material or any other cause outside the control of the Company.

4.3 The Company shall be under no liability to the Customer for any loss including (but not limited to) loss of profits and consequential, loss or for damage to persons or property or for death or injury caused by any act or omission including (but not limited to) negligent acts or omissions of the Company to the Company's employee's or agents.

4.4 The Customer shall indemnify the Company against any claims made against the Company by any third party in respect of any such loss, damage, death or injury as is set out in paragraph 4.3 of these terms and conditions, the Customer further agrees to indemnify the Company against all losses and expenses which the Company may suffer or incur owing to the failure of the Customer fully to observe its obligations under these Conditions of Sale.

4.5 Save as herein provided:

(a) The Company makes no express warranty in respect of the Goods.

(b) The company shall not be liable in respect of any warranty, condition, representation, or statement concerning the Goods unless this is expressly provided for in writing as being part of this Contract and signed by the Company.

(c) The Company's liability hereunder (if any) shall be limited to the value of the Goods the subject of this Contract.

(d) All warranties and conditions implied at common law or under statute are expressly excluded from the Contract unless such exclusion would be illegal or void.

(e) The Company does not warrant that the Goods are of a description, quality and character suitable for the purposes for which they are purchased by the Customer unless this is expressly provided for in writing as being part of this Contract and signed by the Company.

5. PROPERTY RISK AND INSURANCE

5.1 Legal and beneficial ownership of the Goods is retained by the Company and the Customer shall hold the Goods as the Company's fiduciary agent and bailee until payment by the Customer in full of all moneys owing or payable by the Customer to the Company in respect of the sale of Goods. Until such payment is made in full:

(a) The Customer shall have the right to use the Goods for the purpose for which they are sold;

(b) The Company shall have the right to retake possession of the Goods and to resell the Goods. For the purpose of enabling the Company to retake possession of the Goods, the Company is hereby irrevocably authorised to enter the Customer's premises in which the Goods may from time to time be located and the Customer appoints the Company as its agent to enter any premises not owned by the Customer and on or in which any of the Goods may be located from time to time:

(c) The Company may retake possession of and resell the Goods if:

(i) payment is not made in accordance with these terms and conditions.

(ii) any trade or credit arrangement in existence between the Company and the Customer is breached by the Customer.

(iii) the Customer enters into any composition, assignment or arrangement with creditors; or

(iv) there is appointed under any Act or instrument or by order of any Court, a manager or an administrator or a trustee or a receiver or a receiver and manager or a provisional liquidator, or a liquidator or an official manager in relation to any part of the Customer's undertakings, assets or property.

5.2 Notwithstanding Condition 5.1 the Goods shall be at the sole risk of the Customer from the time goods are delivered or from the time the Goods leave the Company's premises (whichever is the first to occur) notwithstanding that title in the Goods may not have passed to the Customer. It shall be the Customer's obligation to effect full insurance upon the Goods from such time as the Goods are at the Customer's risk.

6. LEGAL CONSTRUCTION

6. 1 The construction, validity and performance of this Contract shall be governed by the laws in force in the State or Territory of the Commonwealth of Australia in which the Contract is made and if the Contract shall be made otherwise than in a State or Territory of the Commonwealth of Australia then the proper law of Contract shall be the law of the State of Victoria.

6.2 The signing of a manifest or delivery docket for goods received notwithstanding anything that may be stated to the contrary by the Customer shall constitute acceptance of these Conditions of Sale.

Fire Australia Co Pty Ltd.
ABN No. 13165523713
47 Rushdale St. Knoxfield VIC-3180. Tel:(03) 9764 0020, Fax: (03) 9764 0023.
E-mail : sales@fireausco.com.au www.fireausco.com.au

NOTE

NOTE